Title: Tool Storage for Centurion Track Press Tools

Application: It is being recommended that an Extendo rack and two Vidmar cabinets be installed near the track press for the purpose of storing all tools required to assemble and disassemble track on the Centurion track press.

Benefits: The rack and cabinets will provide a compact and orderly way to store all track press tooling in close proximity to the track press. All shelves on the rack fully extend to allow easy access to the tools stored on them. The drawers in the cabinets can be arranged by using dividers to allow for individual labeling and storage of tools within each drawer. The tools that are stored in the cabinet will also stay better protected from damage and the surrounding elements.

Other Tools: The complete list of tools required for track assembly and disassembly on the Centurion track press are as follows:

Qty.	Centurion Part No.	Description
1	25	Gage Plate
1	26	Gage Plate
1	27	Gage Plate
1	28	Gage Plate
1	32	Gage Plate
1	33	Gage Plate
1	34	Gage Plate
1	35	Gage Plate
1	36	Gage Plate
1	221	Gage Plate
4	510	Tool Mount
2	545	Bushing Tool
2	546	Pin Tool
2	547A	Bush Insert
8	552	Tool Mount
8	557	Tool Mount
4	565	Tool Mount
8 (1)	573	Tool Mount
2	576A	Bush Insert
2	577	Tool Insert
2	578	Tool Holder
2	579	Tool Holder
2	580	Master Bushing
2	588	Bushing Tool
2	589	Pin Tool
2	590	Tool Insert
2	591A	Pin Insert
2	592	Tool Holder

Qty.	Centurion Part No.	Description
2	593	Tool Holder
2	668	Master Bushing
12	677	Tool Mount
2	685A	Bush Holder
2	686	Pin Tool
2	687	Bushing Insert
2	688	Pin Insert
2	689	Master Bushing
2	696	Master Bushing
2	703	Pin Tool
2	704	Bushing Tool
2	716	Master Bushing
2	723	Master Bushing
2	725A	Bush Holder
2	726	Pin Tool
2	727	Bushing Insert
2	728	Pin Insert
2	735	Pin Tool
2	736	Bushing Tool
2	737A	Bush Holder
2	738	Pin Tool
2	739	Bushing Insert
2	740	Pin Insert
4	757	Tool Mount
8	760	Tool Mount
2	761	Master Bushing
2	775	Master Bushing
2	789	Master Bushing
2	791	Pin Tool
2	792	Tool Insert
2	793	Tool Insert
2	794A	Bush Holder
2	795	Tool Holder
2	811	Bushing Tool
2	812	Pin Tool
2	813	Tool Insert
2	814	Tool Insert
2	815A	Bush Holder
2	816	Tool Holder
2	835	Master Bushing
2	836A	Bush Holder
2	837	Tool Insert
2	848	Pin Tool
2	850	Pin Insert
2	858	Pin Tool
2	859	Bushing Tool
2	864	Pin Tool
2	865A	Bush Holder
2	866A	Pin Holder
2	867	Bushing Insert
1	868	Pin Insert

Qty.	Centurion Part No.	Description
1	869	Pin Insert
2	872A	Bush Holder
2	874A	Bush Insert
2	875	Pin Insert
2	879	Bushing Insert
2	880	Pin Insert
2	882	Bushing Insert
2	883	Master Bushing
2	906	Pin Tool
2	907	Bushing Tool
2	908	Tool Holder
2	909	Tool Holder
2	910	Pin Tool
2	911	Bushing Tool
2	912A	Bush Holder
2	913	Bushing Tool
2	914	Pin Tool
2	915A	Bush Holder
1	916	Gage Plate
2	917	Master Bushing
2	919A	Bush Holder
2	920	Master Bushing
2	922	Master Bushing
1	924	Gage Plate
2	925	Pin Tool
2	926	Bushing Tool
2	928	Pin Tool
1	930	Pin Insert
1	931	Pin Insert
2	932	Pin Tool
2	933	Bushing Tool
2	935	Pin Tool
1	937	Pin Insert
1	938	Pin Insert
2	1057	Bushing Insert
2	1059	Pin Insert
2	1061	Bushing Tool
2	1064	Bushing Insert
2	1091	Pin Tool
2	1091A	Pin Holder
2	1092A	Bush Holder
2	1093	Bushing Insert
2	1096A	Bush Holder
2	1097	Bushing Insert
2	1105	Pin Tool
2	1106A	Pin Holder
2	1107	Pin Tool
2	1109A	Bush Insert
2	1110	Pin Tool
2	1111A	Pin Holder
2	1114	Pin Insert

Qty.	Centurion Part No.	Description
2	1117	Pin Tool
2	1118	Bushing Tool
2	1119A	Bush Holder
2	1123	Pin Tool
4	1126	Tool Mount
2	1127	Pin Tool
2	1128	Bushing Insert
2	1129A	Pin Disasy
2	1130	Bushing Insert
2	1131	Bushing Tool
2	1132	Pin Tool
2	1133	Pin Tool
2	1134	Pin Tool
2	1136	Bushing insert
2	1137	Bushing Insert
2	1138	Bushing Insert
2	1139A	Pin Holder
2	1140A	Pin Holder
2	1141A	Pin Holder
2	1143A	Pin Holder
2	1144	Bushing Tool
2	1145	Bushing Tool
2	1146	Pin Tool
2	1148	Bushing Tool
2	1149	Bushing Tool
2	1150	Bushing Insert
2	1151	Bushing Insert
2	1152	Bushing Tool
2	1153	Bushing Tool
2	1154	Bushing Tool
2	1155	Pin Tool
2	1156	Tool Insert
2	1157	Spacer
2	1158	Spacer
2	1174A	Bush Holder
2	1175	Pin Tool
2	1176	Pin Tool
2	1177	Pin Tool
2	1178	Pin Tool
2	1179	Pin Tool
2	1180	Pin Tool
2	1181	Pin Tool
2	1198	Master Bushing
2	A2871	Anvil Spacer
25	A2904-001	Shim, Pin Tooling
25	A2904-002	Shim, Pin Tooling
25	A2905-003	Shim, Pin Tooling
1	C1000-002	Tool Holder RH
1	C1000-003	Tool Holder RH
1	C1000-005	Base Tool Mount
1	C1001-002	Tool Holder LH

Qty.	Centurion Part No.	Description
1	C1001-003	Tool Holder LH
1	C1001-005	Base Tool Mount
1	D1054-001	Saddle
1	D1054-004	Saddle
1	D1054-007	Saddle
1	D1054-017A	Saddle
1	D1054-023	Saddle
1	D1054-027	Saddle
1	D1054-029	Saddle
1	D1054-032	Saddle
1	D1054-034	Saddle
1	D1092-003	Saddle
1	D1092-004	Saddle
1	D1092-005	Saddle
1	D1096-001	Saddle
1	D1096-002	Saddle
1	D1096-003	Saddle
1	D1096-007	Saddle
1	D1096-009	Saddle
25	36-0259	SOC HD Cap Screw 12mm
25	36-0261	Screw, 10mm-1.5 X 25mm
25	36-0262	Nut, 10mm-1.5 hex
25	56-0146	Spring, .66 X .072 X 2.5LG
25	56-0150	Compression Spring

* The suffix A on some of the Centurion part numbers denotes the latest design change

Specifications: The Extendo rack (EM100-4836 HD 72-4) is equipped with 4 roll-out shelves that have a rated capacity of 2000 pounds per shelf based on evenly distributed loading. The top bolted shelf has a 1000 pound capacity but can be re-enforced to 2000 pounds capacity when specified. The overall rack dimensions are: width (57 inches), depth (38 inches) and height (72 inches). The roll-out shelves are 48 inches deep by 36 inches wide.

The Vidmar cabinets (Model 340) are equipped with eight pull-out shelves that have a rated capacity of 400 pounds per shelf based on evenly distributed loading. The overall cabinet dimensions are: width (30 inches), depth (27-3/4 inches) and height (59 inches). The pull-out shelves are 25-1/8 inches deep by 25-1/8 inches wide.

Special Instructions: Each drawer of the Vidmar cabinets can be divided into different size compartments by using partitions and dividers to keep each tool in a specified place. Furthermore, each compartment can be labeled individually with a label holder that attaches to the dividers.

When ordering the Vidmar cabinets, the following items are recommended:

Quantity Shipped	Unit of Measure	Model No.	Description - Customer Part No.
2	EA	0340	Cabinets, each complete with 1-No.25 drawer, 7-No.45 drawers, 1 SL10 Locking Device
10	EA	P20	Partition
50	EA	P40	Partition
10	EA	D2005	Divider (3½" usable width)
10	EA	D2007	Divider (5 1/8" usable width)
10	EA	D2009	Divider (6 5/8" usable width)
20	EA	D4005	Divider (3 1/2" usable width)
40	EA	D4006	Divider (4 1/4" usable width)
80	EA	D4009	Divider (6 7/8" usable width)
20	EA	D4011	Divider (8 1/4" usable width)
200	EA	LH01	Label Holder

If it is desirable to have the cabinets and rack match the track press in color, you can specify color no. (S20100) when ordering these items.

The recommended drawer layout for each drawer in the Vidmar cabinets is as follows:

Cabinet 1 - Drawer 1 (FROM TOP)

This drawer left clear so that any reference information can be stored here.

Cabinet 1 - Drawer 2

6-5/8"	6-5/8"	6-5/8"	4-1/4"
	590	685A	696
577	8L 589 P.D.A.	668	689
576A	8L 588 B.D.A.	8L P.A. 593	688
547A	580	8L 592 B.A.	687
9L 546 D.A. 545	579		
	578	591A	686

Cabinet 1 - Drawer 3

6-5/8"	6-5/8"	6-5/8"	4-1/4"
725A		775	795
	736	761	794A
723		740	
	735		
716		739	793
	728	738	792
704	727		791
703	726	737A	789

Cabinet 1 - Drawer 4

4-1/4"	6-5/8"	6-5/8"	6-5/8"
816			867
815A	850		
814	9L 848 P.A.	864	866A
	837		
813	836A	859	865A
812	835	858	
811			

Cabinet 1 - Drawer 5

6-5/8"	4-1/4"	6-5/8"	6-5/8"
875	883	909	917
874A	882	908	915A 914
9L 872A B.A.	880		913
		907	912A
869	879		911
868		906	910

Cabinet 1 - Drawer 6

6-5/8"	6-5/8"	4-1/4"	6-5/8"
926	933	938	1064
	932		
925	931		1061
922	930	937	
920	928	935	1059
919A	D# P.A.		1057

Cabinet 1 - Drawer 7

6-5/8"	6-5/8"	6-5/8"	4-1/4"
1105	1117	1129A	1134
1097	1114		
	1111A	1128	1133
1096A		1127	
	1110	1123	1132
1093	1109A	1119A	1131
1092A	1107		
1091A	1106A	1118	1130

Cabinet 1 - Drawer 8

4-1/4"	6-5/8"	6-5/8"	6-5/8"
1139A	1148	1151	1153
	1146		
1138	1145	1150	
	1144		
1137	1143		1152
	1141A	1149	D# 11 B.A.
1136	1140A		

Cabinet 2 - Drawer 1 (FROM TOP)

6-5/8"	4-1/4"	6-5/8"	6-5/8"
Large Springs	Mach. Screws		
		Adjusting Screws	
Springs			
		Machine Screws	
Nuts	Set Screws	Dowels	

Cabinet 2 - Drawer 2

6-5/8"	6-5/8"	4-1/4"	6-5/8"
1157	1178		287
1156	1177	1198	~~1403A~~
1155	1176	1181	1390
	1175		1384
1154	1174A	1180	~~1091~~
	1158	1179	1383

Cabinet 2 - Drawer 3

3-1/2"	33	924
4-1/4"	32	916
4-1/4"	28	221
4-1/4"	27	36
4-1/4"	26	35
4-1/4"	25	34

Cabinet 2 - Drawer 4

4-1/4"	4-1/4"	4-1/4"	4-1/4"	4-1/4"	3-1/2"
510	9L 552 Tool Mount	557	8L Tool 573 Mount	573	

Cabinet 2 - Drawer 5

4-1/4"	4-1/4"	4-1/4"	4/1-4"	8"
565	677	677	757	

These (2) drawers will need to be reinforced on the bottom as these bars are fairly heavy.

Cabinet 2 - Drawer 6

4-1/4"	4-1/4"	4-1/4"	4-1/4"	8"
760	760	760	1126	

This drawer will also need to be reinforced.

Cabinet 2 - Drawers 7 & 8

Misc. track press hand tools such as: impact wrench, electric drill, PPR extruders, etc

* The Centurion tooling that has been illustrated here is "tooling by pit

Anvil

Overall view of storage area with Extendo rack and two Vidmar cabinets.

The Extendo rack is compact yet allows easy access to the tooling stored on the individual shelves.

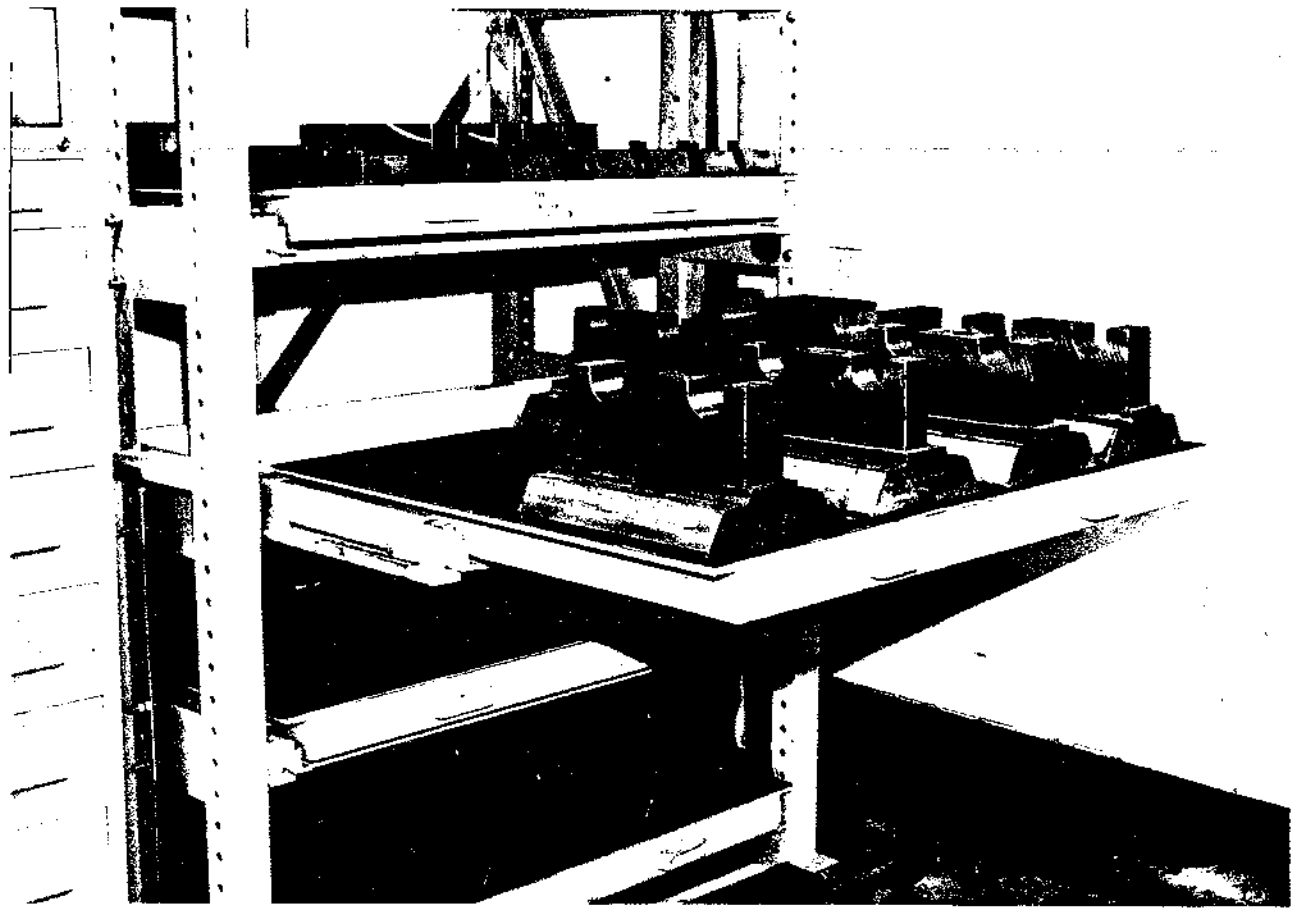

The Vidmar cabinets provide a compact and orderly way to store the track press tooling.

TRACK INSPECTION FORM

TRACK SERIAL NUMBER _____

A. DEALER CODE _____
B. DATE (MMDDYY) _____
C. CUSTOMER _____
D. MODEL _____
E. TRACTOR SN _____
F. MACH. HOURS _____
G. TRACK HOURS _____

H. EMPLOYEE I. D. _____
I. PART # RESPONSIBLE _____
J. QUANTITY _____
K. DESCRIPTION CODE _____
L. GROUP # _____
M. INOPERABLE CODE (Y/N) _____
N. WORK ORDER # _____
PPR (Y/N) _____ LINK PART # _____

SHOP OR FIELD REPAIR? _____

COMPLETE TRACK DISASSEMBLY (Y/N) _____

TURNED? ☐ YES ☐ NO

MEASUREMENTS

	DIMENSION	%WORN
LINK		
BUSHING		
SCALE		
SHOE		

SHOE WIDTH _____

REGROUSERED? ☐ YES ☐ NO

NUMBER OF:

(BEFORE DISASSEMBLY)

DRY JOINTS _____
LOW JOINTS (LESS THAN 3 IN) _____
CRACKED LINKS _____
CRACKED SHOES _____
BUSHINGS WALKING _____

DAMAGED SPLIT LINKS? ☐ YES ☐ NO

(AFTER DISASSEMBLY)

DAMAGED LINKS _____
GALLED PINS _____
BROKEN PINS _____
CRACKED BUSHINGS _____
GROOVED BUSHINGS _____

PART NUMBER OF SEAL REMOVED _____

REPAIR OPTIONS: A. FLOOR REPAIR B. RESEAL C. TURN PINS & BUSHINGS D. REGROUSER E. PRORATE F. SCRAP-NO WARRANTY

REASON TRACK WAS REMOVED _____

COMMENTS: _____

TRACK INSPECTION FORM

TRACK SERIAL NUMBER _____

A. DEALER CODE _____
B. DATE (MMDDYY) _____
C. CUSTOMER _____
D. MODEL _____
E. TRACTOR SN _____
F. MACH. HOURS _____
G. TRACK HOURS _____

H. EMPLOYEE I. D. _____
I. PART # RESPONSIBLE _____
J. QUANTITY _____
K. DESCRIPTION CODE _____
L. GROUP # _____
M. INOPERABLE CODE (Y/N) _____
N. WORK ORDER # _____
PPR (Y/N) _____ LINK PART # _____

SHOP OR FIELD REPAIR? _____

COMPLETE TRACK DISASSEMBLY (Y/N) _____

TURNED? ☐ YES ☐ NO

MEASUREMENTS

	DIMENSION	%WORN
LINK		
BUSHING		
SCALE		
SHOE		

SHOE WIDTH _____

REGROUSERED? ☐ YES ☐ NO

NUMBER OF:

(BEFORE DISASSEMBLY)

DRY JOINTS _____
LOW JOINTS (LESS THAN 3 IN) _____
CRACKED LINKS _____
CRACKED SHOES _____
BUSHINGS WALKING _____

(AFTER DISASSEMBLY)

DAMAGED LINKS _____
GALLED PINS _____
BROKEN PINS _____
CRACKED BUSHINGS _____
GROOVED BUSHINGS _____

☐ DAMAGED SPLIT LINKS? ☐ YES ☐ NO

PART NUMBER OF SEAL REMOVED _____

REPAIR OPTIONS: A. FLOOR REPAIR B. RESEAL C. TURN PINS & BUSHINGS D. REGROUSER E. PRORATE F. SCRAP-NO WARRANTY

REASON TRACK WAS REMOVED _____

COMMENTS: _____

Elevated Sprocket Machines

COMPONENTS

Dry Joints — Link assemblies should be checked weekly for dry joints. This should be done by lightly touching the pin end or bushing after a machine has been working. A dry pin or bushing will be relatively warmer from metal-to-metal friction.

CAUTION — the pin and bushing of a dry joint may be hot enough to burn fingers.

Warm, squeaking and kinking joints are only indicators of potential dry joints. The only positive means of determining whether a dry track joint has developed is when pitch extension occurs. The decision to remove the track from the machine should be based on pitch extension only. Measure the next pin away from the dry joint in both directions to be sure you have recorded the pitch extension correctly. The single joint pitch extension should not exceed the wear limits shown in the following chart.

	New Pitch	Single Joint Wear Limit
D11N	12.50" (318 mm)	12.75" (324 mm)
D10N	10.25" (260 mm)	10.50" (266 mm)
D10	10.25" (260 mm)	10.50" (266 mm)
D9N	9.45" (240 mm)	9.70" (246 mm)
D9L	9.00" (229 mm)	9.25" (235 mm)
D8N	8.50" (216 mm)	8.75" (222 mm)
D8L	8.50" (216 mm)	8.75" (222 mm)
D7H	8.50" (216 mm)	8.75" (222 mm)
D6H	8.00" (203 mm)	8.25" (209 mm)
D5H	7.50" (190 mm)	7.75" (196 mm)
D4H	6.75" (171 mm)	7.00" (177 mm)

Shoes

See pages 49 through 53 for detailed shoe information. The following points are specifically for the elevated sprocket tractors.

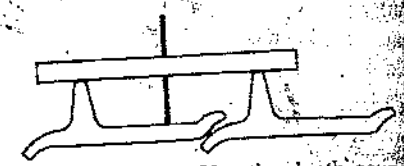

Measurement — Use the depth gauge or the Ultrasonic Wear Indicator to measure shoes.

Shoe Bolt Torques

Model	Bolt Size	Torque Turn		
D11N	1-3/8"	1100 ± 1500 ±	100 ft. lb. 150 Nm	± 1/3 turn ± 1/3 turn
D10N/ D10	1-1/8"	650 ± 870 ±	50 ft. lb. 70 Nm	± 1/3 turn ± 1/3 turn
D9N/ D9L	1"	650 ± 870 ±	50 ft. lb. 70 Nm	± 1/3 turn ± 1/3 turn
D8N/ D8L	7/8"	480 ± 680 ±	50 ft. lb. 70 Nm	± 1/3 turn ± 1/3 turn
D7H, D6H	3/4"	300 ± 400 ±	50 ft. lb. 70 Nm	± 1/3 turn ± 1/3 turn
D5H, D4H	5/8"	120 ± 170 ±	30 ft. lb. 40 Nm	± 1/3 turn ± 1/3 turn

Use the torque turn tightening method reviewed on page 53.

Shoe Width — Wide track shoes are a major cause of undercarriage component failures and dry joints. See page 10 for a detailed discussion of the effects of wide track shoes.

Idlers

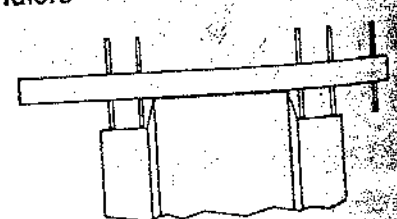

See pages 54 through 56 for detailed idler information.

Elevated Sprocket Machines

COMPONENTS

Dry Joints — Link assemblies should be checked weekly for dry joints. This should be done by lightly touching the pin end or bushing after a machine has been working. A dry pin or bushing will be relatively warmer from metal-to-metal friction.

CAUTION — the pin and bushing of a dry joint may be hot enough to burn fingers.

Warm, squeaking and kinking joints are only indicators of potential dry joints. The only positive means of determining whether a dry track joint has developed is when pitch extension occurs. The decision to remove the track from the machine should be based on pitch extension only. Measure the next pin away from the dry joint in both directions to be sure you have recorded the pitch extension correctly. The single joint pitch extension should not exceed the wear limits shown in the following chart.

	New Pitch	Single Joint Wear Limit
D11N	12.50" (318 mm)	12.75" (324 mm)
D10N	10.25" (260 mm)	10.50" (266 mm)
D10	10.25" (260 mm)	10.50" (266 mm)
D9N	9.45" (240 mm)	9.70" (246 mm)
D9L	9.00" (229 mm)	9.25" (235 mm)
D8N	8.50" (216 mm)	8.75" (222 mm)
D8L	8.50" (216 mm)	8.75" (222 mm)
D7H	8.50" (216 mm)	8.75" (222 mm)
D6H	8.00" (203 mm)	8.25" (209 mm)
D5H	7.50" (190 mm)	7.75" (196 mm)
D4H	6.75" (171 mm)	7.00" (177 mm)

Shoes

See pages 49 through 53 for detailed shoe information. The following points are specifically for the elevated sprocket tractors.

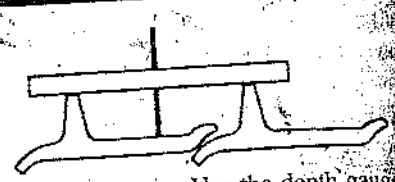

Measurement — Use the depth gauge or the Ultrasonic Wear Indicator to measure shoes.

Shoe Bolt Torques

Model	Bolt Size	Torque	Turn
D11N	1-3/8"	1100 ± 1500 ±	100 ft. lb. 150 Nm	± 1/3 turn ± 1/3 turn
D10N/ D10	1-1/8"	650 ± 870 ±	50 ft. lb. 70 Nm	± 1/3 turn ± 1/3 turn
D9N/ D9L	1"	650 ± 870 ±	50 ft. lb. 70 Nm	± 1/3 turn ± 1/3 turn
D8N/ D8L	7/8"	480 ± 680 ±	50 ft. lb. 70 Nm	± 1/3 turn ± 1/3 turn
D7H, D6H	3/4"	300 ± 400 ±	50 ft. lb. 70 Nm	± 1/3 turn ± 1/3 turn
D5H, D4H	5/8"	120 ± 170 ±	30 ft. lb. 40 Nm	± 1/3 turn ± 1/3 turn

Use the torque turn tightening meth reviewed on page 53.

Shoe Width — Wide track shoes a major cause of undercarriage compo failures and dry joints. See page 10 f detailed discussion of the effects of track shoes.

Idlers

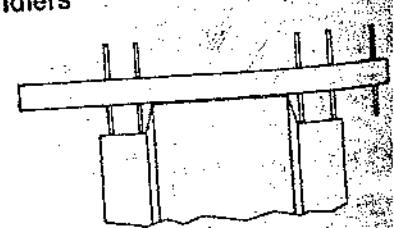

See pages 54 through 56 for detailed information.

Elevated Sprocket Machines

COMPONENTS

Dry Joints — Link assemblies should be checked weekly for dry joints. This should be done by lightly touching the pin end or bushing after a machine has been working. A dry pin or bushing will be relatively warmer from metal-to-metal friction.

CAUTION — the pin and bushing of a dry joint may be hot enough to burn fingers.

Warm, squeaking and kinking joints are only indicators of potential dry joints. The only positive means of determining whether a dry track joint has developed is when pitch extension occurs. The decision to remove the track from the machine should be based on pitch extension only. Measure the next pin away from the dry joint in both directions to be sure you have recorded the pitch extension correctly. The single joint pitch extension should not exceed the wear limits shown in the following chart.

	New Pitch	Single Joint Wear Limit
D11N	12.50" (318 mm)	12.75" (324 mm)
D10N	10.25" (260 mm)	10.50" (266 mm)
D10	10.25" (260 mm)	10.50" (266 mm)
D9N	9.45" (240 mm)	9.70" (246 mm)
D9L	9.00" (229 mm)	9.25" (235 mm)
D8N	8.50" (216 mm)	8.75" (222 mm)
D8L	8.50" (216 mm)	8.75" (222 mm)
D7H	8.50" (216 mm)	8.75" (222 mm)
D6H	8.00" (203 mm)	8.25" (209 mm)
D5H	7.50" (190 mm)	7.75" (196 mm)
D4H	6.75" (171 mm)	7.00" (177 mm)

Shoes

See pages 49 through 53 for detailed shoe information. The following points are specifically for the elevated sprocket tractors.

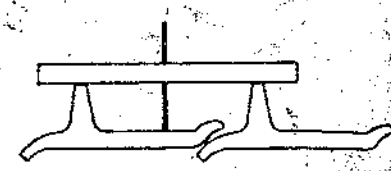

Measurement — Use the depth gauge or the Ultrasonic Wear Indicator to measure shoes.

Shoe Bolt Torques

Model	Bolt Size	Torque Turn		
D11N	1-3/8"	1100 ±	100 ft. lb.	± 1/3 turn
		1500 ±	150 Nm	± 1/3 turn
D10N/ D10	1-1/8"	650 ±	50 ft. lb.	± 1/3 turn
		870 ±	70 Nm	± 1/3 turn
D9N/ D9L	1"	650 ±	50 ft. lb.	± 1/3 turn
		870 ±	70 Nm	± 1/3 turn
D8N/ D8L	7/8"	480 ±	50 ft. lb.	± 1/3 turn
		680 ±	70 Nm	± 1/3 turn
D7H, D6H	3/4"	300 ±	50 ft. lb.	± 1/3 turn
		400 ±	70 Nm	± 1/3 turn
D5H, D4H	5/8"	120 ±	30 ft. lb.	± 1/3 turn
		170 ±	40 Nm	± 1/3 turn

Use the torque turn tightening method reviewed on page 53.

Shoe Width — Wide track shoes are a major cause of undercarriage component failures and dry joints. See page 10 for a detailed discussion of the effects of wide track shoes.

Idlers

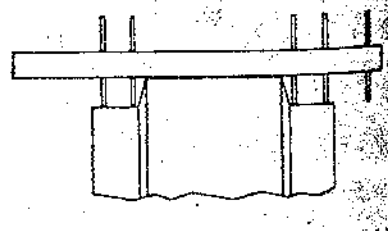

See pages 54 through 56 for detailed idler information.

Elevated Sprocket Machines

COMPONENTS

Dry Joints — Link assemblies should be checked weekly for dry joints. This should be done by lightly touching the pin end or bushing after a machine has been working. A dry pin or bushing will be relatively warmer from metal-to-metal friction.

CAUTION — the pin and bushing of a dry joint may be hot enough to burn fingers.

Warm, squeaking and kinking joints are only indicators of potential dry joints. The only positive means of determining whether a dry track joint has developed is when pitch extension occurs. The decision to remove the track from the machine should be based on pitch extension only. Measure the next pin away from the dry joint in both directions to be sure you have recorded the pitch extension correctly. The single joint pitch extension should not exceed the wear limits shown in the following chart.

	New Pitch	Single Joint Wear Limit
D11N	12.50" (318 mm)	12.75" (324 mm)
D10N	10.25" (260 mm)	10.50" (266 mm)
D10	10.25" (260 mm)	10.50" (266 mm)
D9N	9.45" (240 mm)	9.70" (246 mm)
D9L	9.00" (229 mm)	9.25" (235 mm)
D8N	8.50" (216 mm)	8.75" (222 mm)
D8L	8.50" (216 mm)	8.75" (222 mm)
D7H	8.50" (216 mm)	8.75" (222 mm)
D6H	8.00" (203 mm)	8.25" (209 mm)
D5H	7.50" (190 mm)	7.75" (196 mm)
D4H	6.75" (171 mm)	7.00" (177 mm)

Shoes

See pages 49 through 53 for detailed shoe information. The following points are specifically for the elevated sprocket tractors.

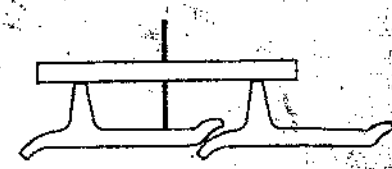

Measurement — Use the depth gauge or the Ultrasonic Wear Indicator to measure shoes.

Shoe Bolt Torques

Model	Bolt Size	Torque	Turn
D11N	1-3/8"	1100 ± 100 ft. lb.	± 1/3 turn
		1500 ± 150 Nm	± 1/3 turn
D10N/ D10	1-1/8"	650 ± 50 ft. lb.	± 1/3 turn
		870 ± 70 Nm	± 1/3 turn
D9N/ D9L	1"	650 ± 50 ft. lb.	± 1/3 turn
		870 ± 70 Nm	± 1/3 turn
D8N/ D8L	7/8"	480 ± 50 ft. lb.	± 1/3 turn
		680 ± 70 Nm	± 1/3 turn
D7H, D6H	3/4"	300 ± 50 ft. lb.	± 1/3 turn
		400 ± 70 Nm	± 1/3 turn
D5H, D4H	5/8"	120 ± 30 ft. lb.	± 1/3 turn
		170 ± 40 Nm	± 1/3 turn

Use the torque turn tightening method reviewed on page 53.

Shoe Width — Wide track shoes are a major cause of undercarriage component failures and dry joints. See page 10 for a detailed discussion of the effects of wide track shoes.

Idlers

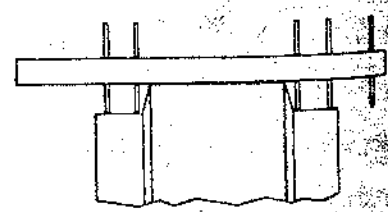

See pages 54 through 56 for detailed idler information.

Elevated Sprocket Machines

COMPONENTS

Dry Joints — Link assemblies should be checked weekly for dry joints. This should be done by lightly touching the pin end or bushing after a machine has been working. A dry pin or bushing will be relatively warmer from metal-to-metal friction.

CAUTION — the pin and bushing of a dry joint may be hot enough to burn fingers.

Warm, squeaking and kinking joints are only indicators of potential dry joints. The only positive means of determining whether a dry track joint has developed is when pitch extension occurs. The decision to remove the track from the machine should be based on pitch extension only. Measure the next pin away from the dry joint in both directions to be sure you have recorded the pitch extension correctly. The single joint pitch extension should not exceed the wear limits shown in the following chart.

	New Pitch	Single Joint Wear Limit
D11N	12.50" (318 mm)	12.75" (324 mm)
D10N	10.25" (260 mm)	10.50" (266 mm)
D10	10.25" (260 mm)	10.50" (266 mm)
D9N	9.45" (240 mm)	9.70" (246 mm)
D9L	9.00" (229 mm)	9.25" (235 mm)
D8N	8.50" (216 mm)	8.75" (222 mm)
D8L	8.50" (216 mm)	8.75" (222 mm)
D7H	8.50" (216 mm)	8.75" (222 mm)
D6H	8.00" (203 mm)	8.25" (209 mm)
D5H	7.50" (190 mm)	7.75" (196 mm)
D4H	6.75" (171 mm)	7.00" (177 mm)

Shoes

See pages 49 through 53 for detailed shoe information. The following points are specifically for the elevated sprocket tractors.

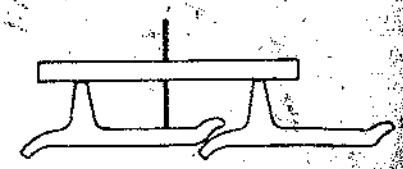

Measurement — Use the depth gauge or the Ultrasonic Wear Indicator to measure shoes.

Shoe Bolt Torques

Model	Bolt Size	Torque	Turn
D11N	1-3/8"	1100 ± 1500 ±	100 ft. lb. 150 Nm	± 1/3 turn ± 1/3 turn
D10N/ D10	1-1/8"	650 ± 870 ±	50 ft. lb. 70 Nm	± 1/3 turn ± 1/3 turn
D9N/ D9L	1"	650 ± 870 ±	50 ft. lb. 70 Nm	± 1/3 turn ± 1/3 turn
D8N/ D8L	7/8"	480 ± 680 ±	50 ft. lb. 70 Nm	± 1/3 turn ± 1/3 turn
D7H, D6H	3/4"	300 ± 400 ±	50 ft. lb. 70 Nm	± 1/3 turn ± 1/3 turn
D5H, D4H	5/8"	120 ± 170 ±	30 ft. lb. 40 Nm	± 1/3 turn ± 1/3 turn

Use the torque turn tightening method reviewed on page 53.

Shoe Width — Wide track shoes are a major cause of undercarriage component failures and dry joints. See page 10 for a detailed discussion of the effects of wide track shoes.

Idlers

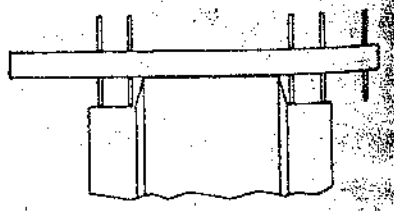

See pages 54 through 56 for detailed idler information.

CENTURION INDUSTRIES INC
45 CAPITOL DR, OCONOMOWOC, WI 53066

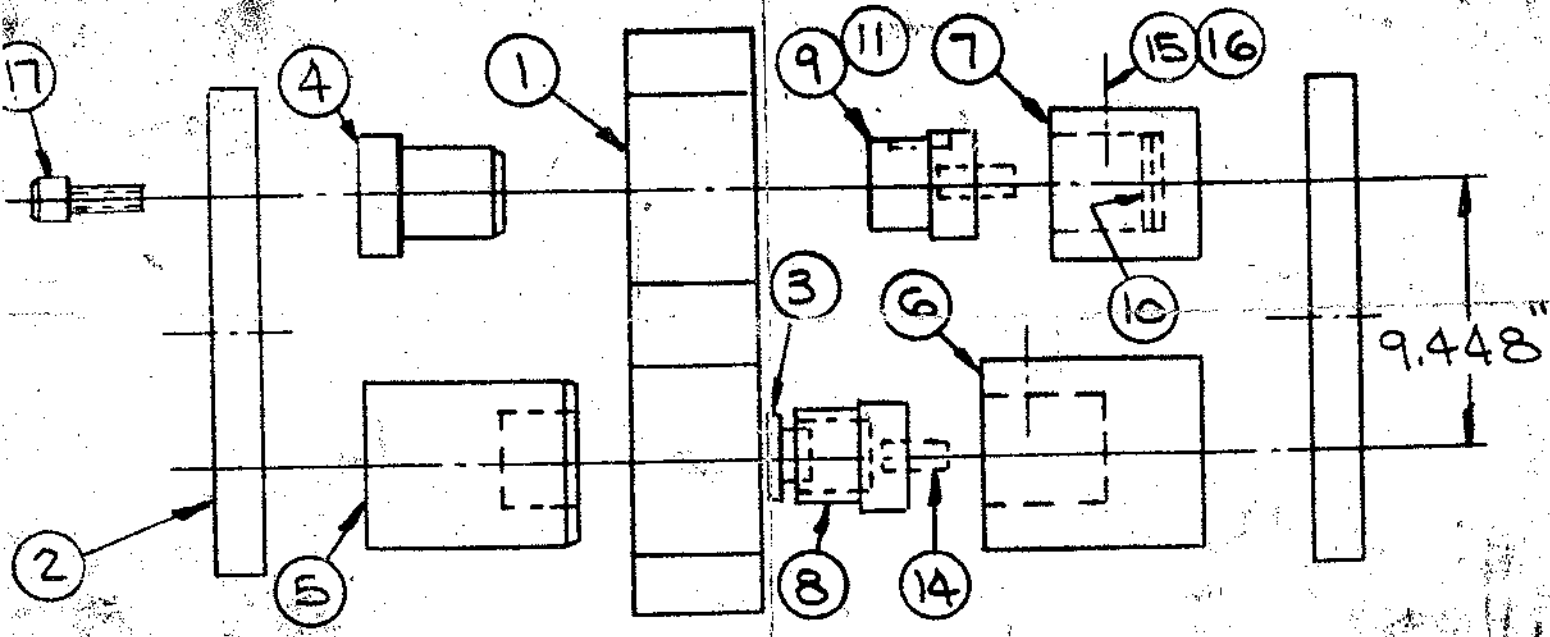

DISASSEMBLY TOOLING ASSEMBLY TOOLING

CATERPILLAR

MODEL	D9N PPR
PIN	2.003 ø x 10.768
BUSHING	3.163/3.346 ø x 7.257

ITEM	QTY	DESCRIPTION	
1	REF	SADDLE *	1096-007
2	2	TOOL MOUNT	C1000-004
3	—	MASTER SPACER	N/A
4	2	PIN TOOL DISASS'Y	1935
5	2	BUSH TOOL DISASS'Y	1936
6	2	BUSH HOLDER ASSY	1937
7	2	PIN HOLDER ASSY	1938
8	2	BUSH INSERT	1939
9	1	PIN INSERT-NOMINAL	1940
10	6	SHIM (PIN)	N/A
11	1	PIN INSERT OTHER SIDE	1941
12			
13	—	GAUGE PLATE	N/A
14	4	SPRING	[illegible]150
15	4	SET SCREW	[illegible]261
16	4	JAM NUT	36-0262
17	8	SOC HD SCREW	N/A

* NOT PART OF TOOL SET

A2398-136

CENTURION INDUSTRIES INC
45 CAPITOL DR, OCONOMOWOC, WI 53066

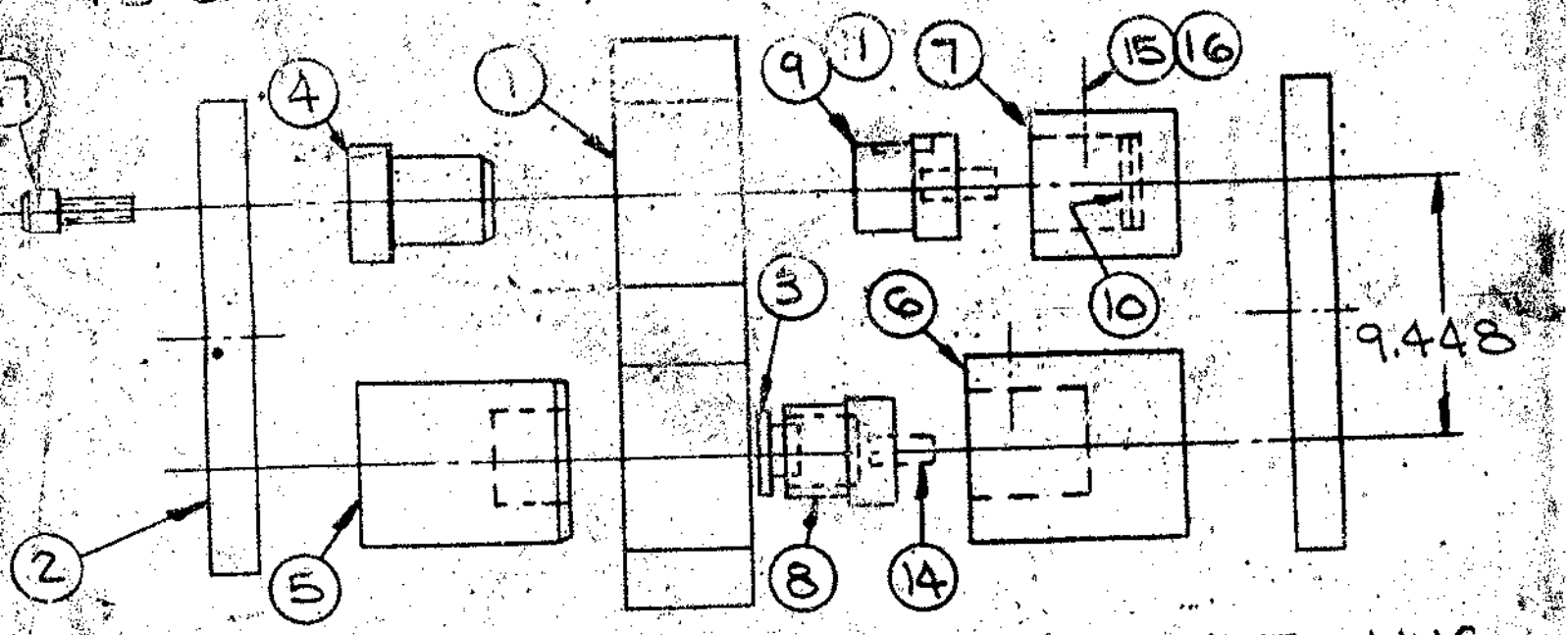

DISASSEMBLY TOOLING ASSEMBLY TOOLING

CATERPILLAR

MODEL	D9N PPR
PIN	2.003 ø x 10.768
BUSHING	3.163/3.346 ø x 7.257

ITEM	QTY	DESCRIPTION	
1	REF	SADDLE *	1096-007
2	2	TOOL MOUNT	C1000-004
3	—	MASTER SPACER	N/A
4	2	PIN TOOL DISASS'Y	1935
5	2	BUSH TOOL DISASS'Y	1936
6	2	BUSH HOLDER ASSY	1937
7	2	PIN HOLDER ASSY	1938
8	2	BUSH INSERT	1939
9	1	PIN INSERT-NOMINAL	1940
10	6	SHIM (PIN)	N/A
11	1	PIN INSERT OTHER SIDE	1941
12			
13	—	GAUGE PLATE	N/A
14	4	SPRING	56-0150
15	4	SET SCREW	36-0261
16	4	JAM NUT	36-0262
17	8	SOC HD SCREW	N/A

NOT PART OF TOOL SET

A2392-136

CENTURION INDUSTRIES INC
45 CAPITOL DR, OCONOMOWOC, WI 53066

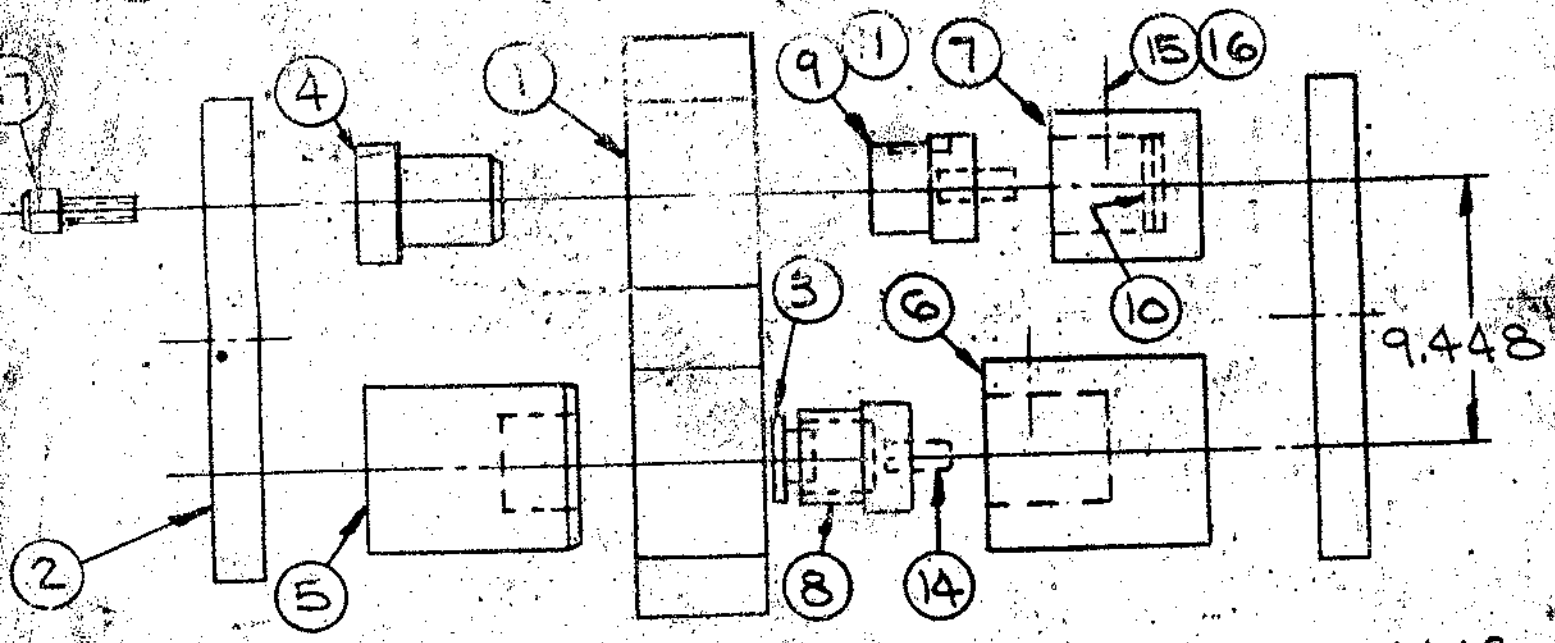

DISASSEMBLY TOOLING ASSEMBLY TOOLING

CATERPILLAR

MODEL	D9N PPR
PIN	2.003 ø x 10.768
BUSHING	3.163/3.346 ø x 7.257

ITEM	QTY	DESCRIPTION	
1	REF	SADDLE *	1096-007
2	2	TOOL MOUNT	C1000-004
3	—	MASTER SPACER	N/A
4	2	PIN TOOL DISASS'Y	1935
5	2	BUSH TOOL DISASS'Y	1936
6	2	BUSH HOLDER ASSY	1937
7	2	PIN HOLDER ASSY	1938
8	2	BUSH INSERT	1939
9	1	PIN INSERT-NOMINAL	1940
10	6	SHIM (PIN)	N/A
11	1	PIN INSERT OTHER SIDE	1941
12			
13	—	GAUGE PLATE	N/A
14	4	SPRING	56-0150
15	4	SET SCREW	36-0261
16	4	JAM NUT	36-0262
17	8	SOC HD SCREW	N/A

NOT PART OF TOOL SET

A2392-136

CENTURION INDUSTRIES INC
45 CAPITOL DR, OCONOMOWOC, WI 53066

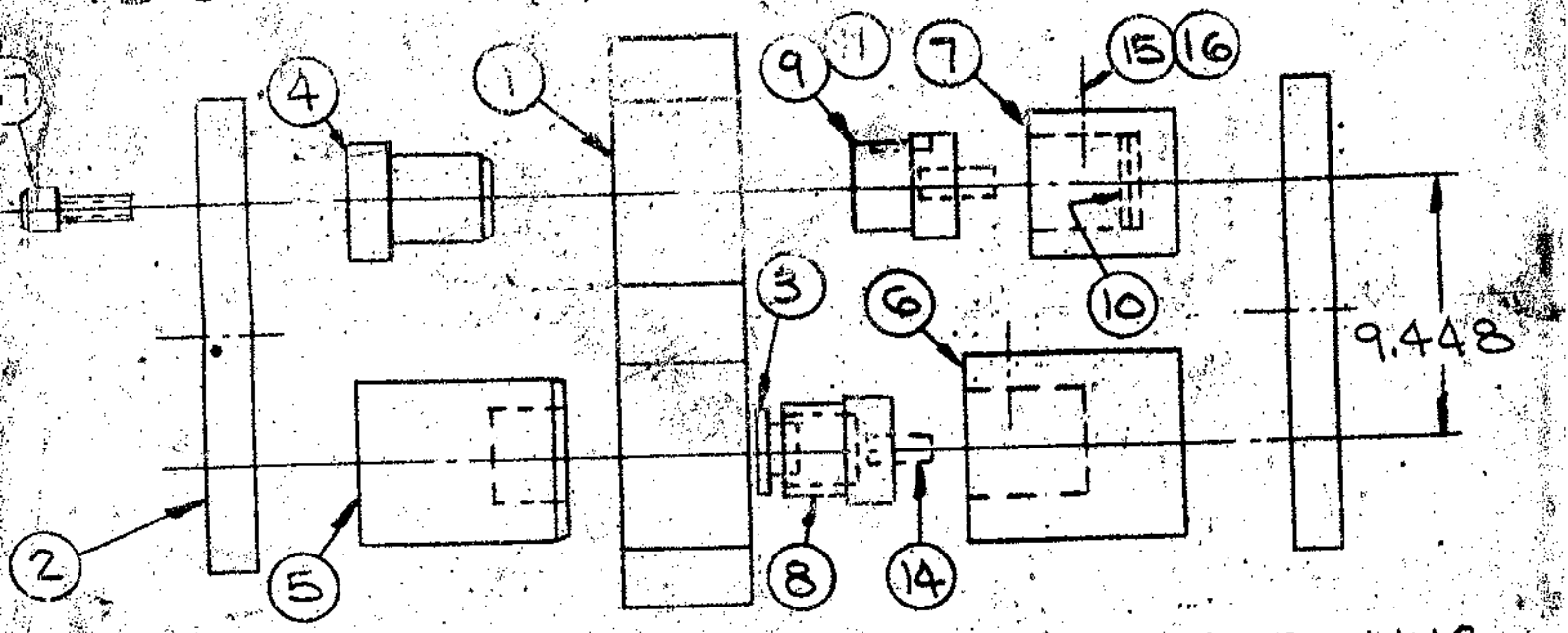

DISASSEMBLY TOOLING ASSEMBLY TOOLING

CATERPILLAR

MODEL	D9N PPR
PIN	2.003 ø x 10.768
BUSHING	3.163/3.346 ø x 7.257

ITEM	QTY	DESCRIPTION	
1	REF	SADDLE *	1096-007
2	2	TOOL MOUNT	C1000-004
3	—	MASTER SPACER	N/A
4	2.	PIN TOOL DISASS'Y	1935
5	2	BUSH TOOL DISASS'Y	1936
6.	2	BUSH HOLDER ASSY	1937
7	2	PIN HOLDER ASSY	1938
8	2	BUSH INSERT	1939
9	1	PIN INSERT-NOMINAL	1940
10	6	SHIM (PIN)	N/A
11	1	PIN INSERT OTHER SIDE	1941
12			
13	—	GAUGE PLATE	N/A
14	4	SPRING	56-0150
15	4	SET SCREW	36-0261
16	4	JAM NUT	36-0262
17	8	SOC HD SCREW	N/A

NOT PART OF TOOL SET

A2392-136

CENTURION INDUSTRIES INC
45 CAPITOL DR, OCONOMOWOC, WI 53066

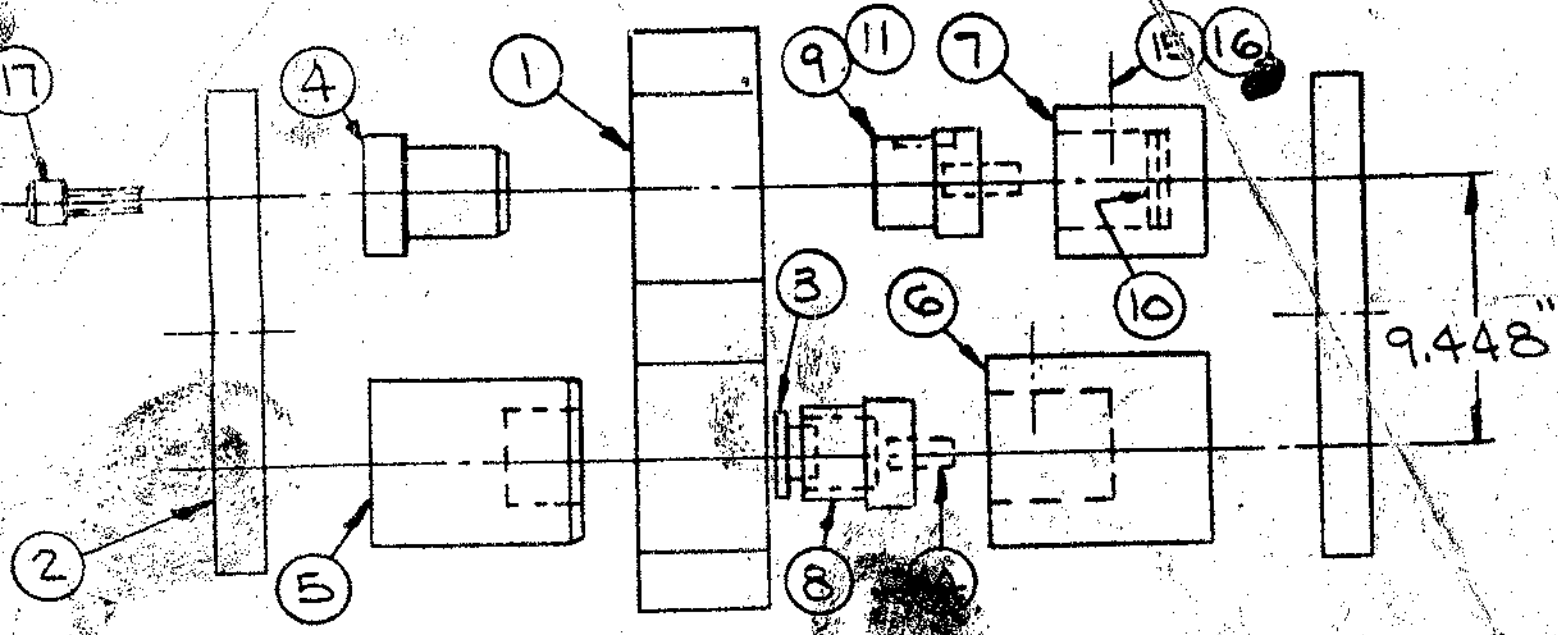

DISASSEMBLY TOOLING ASSEMBLY TOOLING

CATERPILLAR

MODEL	D9N PPR
PIN	2.003 ø x 10.768
BUSHING	3.163 / ø x 7.257 / 3.346

ITEM	QTY	DESCRIPTION	
1	REF	SADDLE *	1096-007
2	2	TOOL MOUNT	C1000-004
3	—	MASTER SPACER	N/A
4	2	PIN TOOL DISASS'Y	1935
5	2	BUSH TOOL DISASS'Y	1936
6	2	BUSH HOLDER ASSY	1937
7	2	PIN HOLDER ASSY	1938
8	2	BUSH INSERT	1939
9	1	PIN INSERT-NOMINAL	1940
10	6	SHIM (PIN)	N/A
11	1	PIN INSERT OTHER SIDE	1941
12			
13	—	GAUGE PLATE	N/A
14	4	SPRING	56-0150
15	4	SET SCREW	36-0261
16	4	JAM NUT	36-0262
17	8	SOC HD SCREW	N/A

* NOT PART OF TOOL SET

A2392-136

CENTURION INDUSTRIES INC.
845 HICKORY STREET
MILWAUKEE, WISCONSIN 53072, USA (414) 691-4150
CATERPILLAR 9.000 PITCH (PPR)

MODEL LINK ASSEMBLY PIN SIZE BUSHING SIZE		D9L PPR 6Y1186 2.003 x 10.768 3.228/3.346 x 7.355			
DESCRIPTION	QTY				
~~SADDLE~~	1	~~D1096-009~~			
TOOL MOUNT R.H.	1	C1000-003			
TOOL MOUNT L.H.	1	C1001-003			
PIN TOOL DISASSEMBLY	2	932			
BUSHING TOOL DISASSEMBLY	2	933			
PIN HOLDER ASSEMBLY	2	935			
PIN INSERT NOMINAL	1	937			
PIN INSERT OTHER SIDE	1	938		part of Pitch Set 1U6036	
BUSHING HOLDER ASSEMBLY	2	1153			
BUSHING INSERT ASSEMBLY	2	1151			
SPRING	4	56-0150			
SET SCREW	4	36-0261			
JAM NUT	4	36-0262			

CENTURION INDUSTRIES INC.
845 HICKORY STREET
PEWAUKEE, WISCONSIN 53072 USA (414) 691-415
CATERPILLAR 9.000 PITCH (PPR)

MODEL LINK ASSEMBLY PIN SIZE BUSHING SIZE		D9L PPR 6Y1186 2.003 x 10.768 3.228/3.346 x 7.355			
DESCRIPTION	QTY				
~~SADDLE~~	1	~~D1096-008~~			
TOOL MOUNT R.H.	1	C1000-003			
TOOL MOUNT L.H.	1	C1001-003			
PIN TOOL DISASSEMBLY	2	932			
BUSHING TOOL DISASSEMBLY	2	933			
PIN HOLDER ASSEMBLY	2	935			
PIN INSERT NOMINAL	1	937			
PIN INSERT OTHER SIDE	1	938		part of pitch set 146030	
BUSHING HOLDER ASSEMBLY	2	1153			
BUSHING INSERT ASSEMBLY	2	1151			
SPRING	4	56-0150			
SET SCREW	4	36-0261			
JAM NUT	4	36-0262			
SHIM	5	A2904-003			

CENTURION INDUSTRIES INC
45 CAPITOL DR, OCONOMOWOC, WI 53066

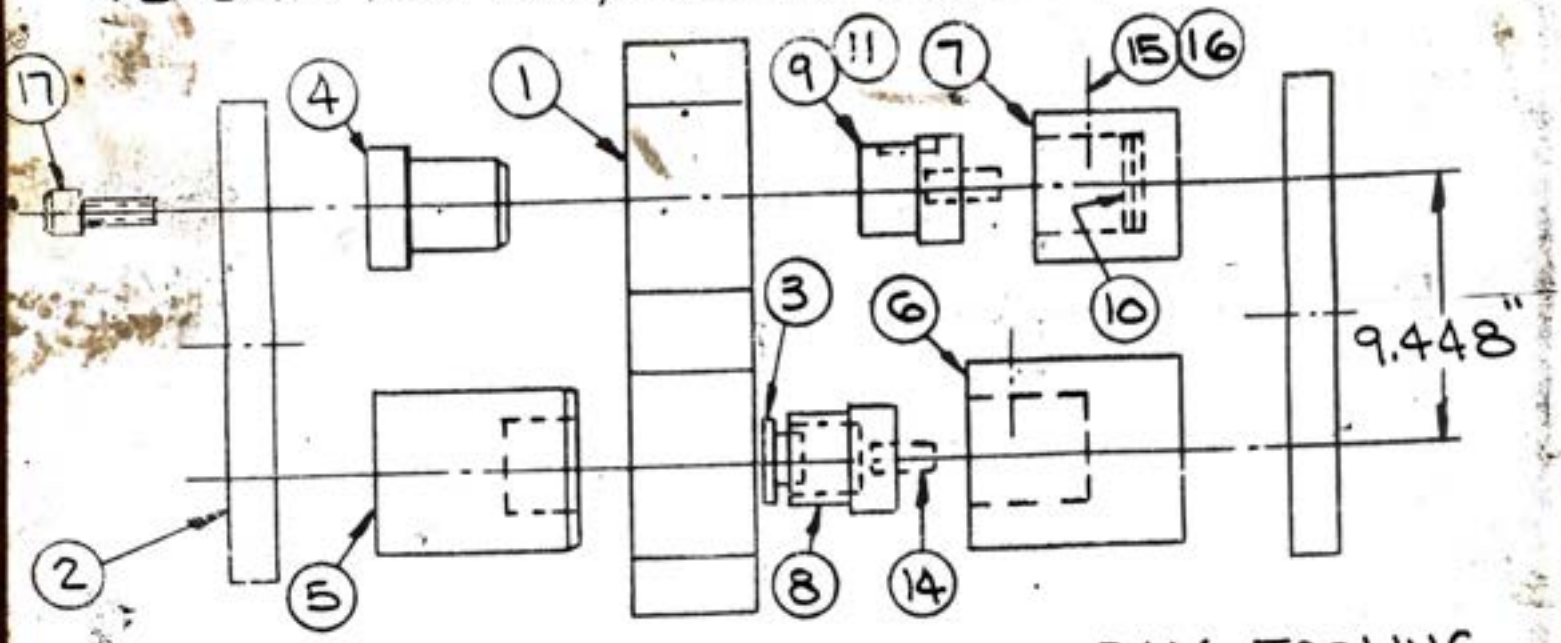

DISASSEMBLY TOOLING ASSEMBLY TOOLING

CATERPILLAR

MODEL	D9N PPR
PIN	2.003 ø x 10.768
BUSHING	3.163/3.346 ø x 7.257

ITEM	QTY	DESCRIPTION	
1	REF	SADDLE *	1096-007
2	2	TOOL MOUNT	C1000-004
3	—	MASTER SPACER	N/A
4	2	PIN TOOL DISASS'Y	1935
5	2	BUSH TOOL DISASS'Y	1936
6	2	BUSH HOLDER ASSY	1937
7	2	PIN HOLDER ASSY	1938
8	2	BUSH INSERT	1939
9	1	PIN INSERT-NOMINAL	1940
10	6	SHIM (PIN)	N/A
11	1	PIN INSERT OTHER SIDE	1941
12			
13	—	GAUGE PLATE	N/A
14	4	SPRING	56-0150
15	4	SET SCREW	36-0261
16	4	JAM NUT	36-0262
17	8	SOC HD SCREW	N/A

* NOT PART OF TOOL SET

A2392-136

CENTURION INDUSTRIES INC.
845 HICKORY STREET
PEWAUKEE, WISCONSIN 53072 USA (414) 691-4150

CATERPILLAR 8.500 PITCH

MODEL LINK ASSEMBLY PIN SIZE BUSHING SIZE		D7H 9G2423 1.878ø x 9.882 2.937ø x 6.405	D8L S.A.L.T. 7T2753 1.878"ø x 9.882 2.937"/3.215ø x 6.406	D8N NON PPR 6Y1136 1.878ø x 9.882 2.937/3.214 ø x 6.405	235 EXC 7T9827 1.877 ø x 9.88 2.812ø x 6.963 7/8 BOLT
DESCRIPTION	QTY				
SADDLE,	1	D1096-001	D1096-002	D1096-002	D1096-001
TOOL MOUNT	4	573 A	573A	573A	573A
SPACER, BUSHING	2	N/A	N/A	1105	922
PIN TOOL DISASSEMBLY	2	589	589	589	1123
BUSHING TOOL DISASSEMBLY	2	588	588	588	1107
PIN HOLDER ASSEMBLY	2	1106A	593	593	579
PIN INSERT ASSEMBLY	2	591A	1177	1177	577
BUSHING HOLDER ASSEMBLY	2	592	592	592	578
BUSHING INSERT ASSEMBLY	2	590	590	590	576A
SPRING	4	56-0146	56-0146	56-0146	56-0146
GAUGE PLATE	1	N/A	N/A	N/A	221
SET SCREW	4	36-0261	36-0261	36-0261	36-0261
JAM SCREW	4	36-0262	36-0262	36-0262	36-0262
SOC HD SCREW	4	36-0259	36-0259	36-0259	36-0259
SHIM (PIN)	5	A2904-002	A2904-002	A2904-002	A2904-002

CENTURION INDUSTRIES INC.
845 HICKORY STREET
PEWAUKEE WISCONSIN 53072 USA (414) 691-415[illegible]
CATERPILLAR 9.000 PITCH

MODEL LINK ASSEMBLY PIN SIZE BUSHING SIZE		D8H K SEALED 85-398 2.00[illegible] Ø x 11.438 2.996/3.038 Ø x 7.941	D8H K SALT 9W8938 2.002 Ø x 11.437 2.996/3.163 Ø x 7.355	D9L SALT 6Y1185 2.003 Ø x 11.437 3.228/3.346 Ø x 7.355"	245S [illegible] 2.003 Ø x 11 2.996/3.03[illegible] x 7.941
DESCRIPTION	QTY				
SADDLE	1	D1096-003	D1096-003	D1096-009	D1096-0[illegible]
TOOL MOUNT	4	552A	552A	552A	552A
SPACER, BUSHING	2	716	N/A	N/A	1198
PIN TOOL DISASSEMBLY	2	1117	546	546	1117
BUSHING TOOL DISASSEMBLY	2	1118	545	545	1118
PIN HOLDER ASSEMBLY	2	848	848	848	848
PIN INSERT ASSEMBLY	2	850	1180A	875A	850
BUSHING HOLDER ASSEMBLY	2	1119A	1119A	872A	1119A
BUSHING INSERT ASSEMBLY	2	874A	547A	1390	874A
SPRING	4	56-0146	56-0146	56-0146	56-014[illegible]
GAUGE PLATE	1	34	N/A	N/A	34
SET SCREW	4	36-0261	36-0261	36-0261	36-0261
JAM SCREW	4	36-0262	36-0262	36-0262	36-026[illegible]
SOC HD SCREW	4	36-0259	36-0259	36-0259	36-025[illegible]
[illegible] (PIN)	5	A2904-003	A2904-003	A2904-003	A2[illegible]
[illegible] Nº		[illegible]	[illegible]	A2[illegible]92	[illegible]

CENTURION INDUSTRIES INC.
845 HICKORY STREET
PEWAUKEE, WISCONSIN 53072 USA (414) 691-4150

CATERPILLAR 9.000 PITCH

MODEL LINK ASSEMBLY PIN SIZE BUSHING SIZE		D8H, K SEALED 85039B 2.003"Ø x 11.438 2.996/3.038 Ø x 7.941	D8H, K S.A.L.T. 9W8938 2.002"Ø x 11.437 2.996"/3.163"Ø x 7.355"	D9L S.A.L.T. 6Y1185 2.003"Ø x 11.437 3.228/3.346" Ø x 7.355"	245S 8K4753 2.003Ø x 11.43 2.996/3.038Ø x 7.941
DESCRIPTION	QTY				
SADDLE	1	D1096-003	D1096-003	D1096-009	D1096-003
TOOL MOUNT	4	552A	552A	552A	552A
SPACER, BUSHING	2	716	N/A	N/A	1198
PIN TOOL DISASSEMBLY	2	1117	546	546	1117
BUSHING TOOL DISASSEMBLY	2	1118	545	545	1118
PIN HOLDER ASSEMBLY	2	848	848	848	848
PIN INSERT ASSEMBLY	2	850	1180A	875A	850
BUSHING HOLDER ASSEMBLY	2	1119A	1119A	872A	1119A
BUSHING INSERT ASSEMBLY.	2	874A	547A	1390	874A
SPRING	4	56-0146	56-0146	56-0146	56-0146
GAUGE PLATE	1	34	N/A	N/A	34
SET SCREW	4	36-0261	36-0261	36-0261	36-0261
JAM SCREW	4	36-0262	36-0262	36-0262	36-0262
SOC HD SCREW	4	36-0259	36-0259	36-0259	36-0259
SHIM (PIN)	5	A2904-003	A2904-003	A2904-003	A2904-003
TOOL SET Nº		A2392-004A	A2392-005C	A2392-115C	A2392-163

CENTURION INDUSTRIES INC.
845 HICKORY STREET
PEWAUKEE, WISCONSIN 53072 USA (414) 691-4150

CATERPILLAR 9.000 PITCH

MODEL LINK ASSEMBLY PIN SIZE BUSHING SIZE		D8H, K SEALED 85Z398 2.003"Ø x 11.438 2.996/3.038 Ø x 7.941	D8H K S.A.L.T. 9W8938 2.00[illegible] Ø x 11.437 2.996/3.163 Ø x 7.355	D9L S.A.L.T. 6Y1185 2.003 Ø x 11.437 3.228/3.34[illegible] Ø x 7.355	.245S 8K4755 2.003 Ø x 11.438 2.996/3.038 Ø x 7.941
DESCRIPTION	QTY				
SADDLE	1	D1096-003	D1096-003	D1096-009	D1096-003
TOOL MOUNT	4	552	552	552	552
SPACER, BUSHING	2	716	N/A	N/A	1198
PIN TOOL DISASSEMBLY	2	1117	546	546	1117
BUSHING TOOL DISASSEMBLY	2	1118	545	545	1118
PIN HOLDER ASSEMBLY	2	848	848	848	848
PIN INSERT ASSEMBLY	2	850	1180A	875A	850
BUSHING HOLDER ASSEMBLY	2	1119A	1119A	872A	1119A
BUSHING INSERT ASSEMBLY	2	874A	547A	1390	874A
SPRING	4	56-0146	[illegible]-0146	56-0146	56-0146
GAUGE PLATE	1	34	N/A	N/A	34
SET SCREW	4	36-0261	36-0261	36-0261	36-0261
JAM SCREW	4	36-0262	36-0262	36-0262	36-0262
SOC HD SCREW	4	36-0259	36-0259	36-0259	36-0259
[illegible]	5	A2[illegible]	[illegible]-003	A2964-003	A2964-003

URION INDUSTRIES INC.
845 HICKORY STREET
PEWAUKEE, WISCONSIN 53072 USA (414) 691-4150
CATERPILLAR 9.448 PITCH

MODEL LINK ASSEMBLY PIN SIZE BUSHING SIZE		D9N NON PPR 6Y1130 2.003"ø x 10.984 3.163"/3.346"ø x 7.257"			
DESCRIPTION	QTY				
SADDLE	1	D1096-007			
TOOL MOUNT	4	1126A			
SPACER, BUSHING	2	N/A			
PIN TOOL DISASSEMBLY	2	1110			
BUSHING TOOL DISASSEMBLY	2	1148			
PIN HOLDER ASSEMBLY	2	1111A			
PIN INSERT ASSEMBLY	2	1059			
BUSHING HOLDER ASSEMBLY	2	1149			
BUSHING INSERT ASSEMBLY	2	1057A			
SPRING	4	56-0146			
GAUGE PLATE	1	N/A			
SET SCREW	4	36-0261			
JAM SCREW	4	36-0262			
SOC HD SCREW	4	36-0259			
MASTER PIN SPACER	2	A2783-003			

CENTURION INDUSTRIES INC.
845 HICKORY STREET
MILWAUKEE WISCONSIN 53072 USA (414) 691 4150

CATERPILLAR 10.250 PITCH

MODEL LINK ASSEMBLY PIN SIZE BUSHING SIZE		[illegible] A67 TW-3.20 2.253ø x 12.25 3.371/3.496ø 8.270	[illegible] E & H 551131 2.253ø x 12.05 3.371ø x 8.856 594 FALCO	245 EXC TG 110A 2.253ø x 11.051 3.371ø x 7.866	
DESCRIPTION	QTY				
SADDLE	1	[illegible]	D1092-004	D1092-004	
TOOL MOUNT	4	557A	557A	557A	
SPACER, BUSHING	2	N/A	883	883	
PIN TOOL DISASSEMBLY	2	106	110	110	
BUSHING TOOL DISASSEMBLY	2	107	107	907	
PIN HOLDER ASSEMBLY	2	[illegible]	909	904	
PIN INSERT ASSEMBLY	2	1181	880	1181	
BUSHING HOLDER ASSEMBLY	2	908	908	908	
BUSHING INSERT ASSEMBLY	2	874	882	882	
SPRING	4	36-0146	36-0146	36-0146	
GAUGE PLATE	1	N/A	35	924	
SET SCREW	4	36-0261	36-0261	36-0261	
JAM SCREW	4	36-0262	36-0262	36-0262	
SOC HD SCREW	4	36-[illegible]	36-0259	36-0251	
[illegible]	5	A2104	A2104	A2104	
[illegible]		A2592-[illegible]	A2592-016A	A2592-12[illegible]	

CENTURION INDUSTRIES INC

845 HICKORY STREET

PEWAUKEE, WISCONSIN 53072 USA (414) 691-4150

CATERPILLAR 12.500 PITCH (PPR)

MODEL LINK ASSEMBLY PIN SIZE BUSHING SIZE		DIIN PPR 6Y1128 2.626ø x 13.812 4.195/4.330ø x 9.343			
DESCRIPTION	QTY				
SADDLE	1	D1092-005			
TOOL MOUNT R.H.	1	C1000-005			
TOOL MOUNT L.H.	1	C1001-005			
PIN TOOL DISASSEMBLY	2	925			
BUSHING TOOL DISASSEMBLY	2	926			
PIN HOLDER ASSEMBLY	2	928			
PIN INSERT NOMINAL	1	930			
PIN INSERT OTHER SIDE	1	931			
BUSHING HOLDER ASSEMBLY	2	1152			
BUSHING INSERT ASSEMBLY	2	1150			
SPRING	4	56-0150			
SET SCREW	4	36-0261			
JAM NUT	4	36-0262			
SPACER ANVIL	2	A2871			

DESCRIPTION	REQUIRED			REQUIRED		
	QTY	I.D.	PART Nº	QTY	I.D.	PART Nº
SADDLE	1	N/A	D1092-005			
TOOL MOUNT	1	N/A	C1000-005	1	N/A	C1001-005
PIN, DISASSY	2	925	B2054-005			
BUSHING, "	2	926	B2055-004			
PIN HOLDER, ASSY	2	928	B2061-003			
PIN INSERT "	1	930	C1166-005	1	931	C1166-006
BUSH HOLDER "	2	1152	C1165-001			
BUSH INSER "	2	1150	C1166-004			
ANVIL SPACER	2	N/A	A2871			
SPRING	N/A	—	56-0146	4	-	56-0150
SET SCREW	4	—	36-0261			
JAM. NUT	4	—	36-0262			
SOC. HD SCREW	N/A	—	36-0259			

ITEM	QUANT.	DESCRIPTION

CENTURION INDUSTRIES INC.

143 HICKORY STREET
NEWAUKEE WISCONSIN 53072

TITLE 12.500 PITCH TOOL SET

DRAWN	DATE	SCALE	APPROVED	A2739.000 DRAWING NUMBER

SHEET 2 OF 2

REV A

ITEM	PART NO.	QTY	DESCRIPTION	MAT'L
REF. 1	C958004	(1)	TOOL BAR	
2	B955704	1	PIN ASSEMBLY TOOL SLEEVE	4340
3	B955504	1	PIN ASSEMBLY TOOL INSERT	4340
4	519-078	2	DIE SPRING (2¾" FREE LG., 1¼" HOLE DIA.)	
5	519-070	2	DIE SPRING (1½" FREE LG., ¾" O.D.)	
6	A955601	2	LOCATING PIN	
7	B956704	1	BUSHING ASSEMBLY TOOL SLEEVE	4340
8	B956504	1	BUSHING ASSEMBLY TOOL INSERT	4340
9	529-1043	2	RETAINING RING-INTERNAL	
10	529-1294	1	RETAINING RING-EXTERNAL	
11	529-215	8	S.H.C.S. ⅜-16 NC × 2" LG	
12	A957004	4	SHIM .020 (.5mm) THICK, 2½ O.D.	

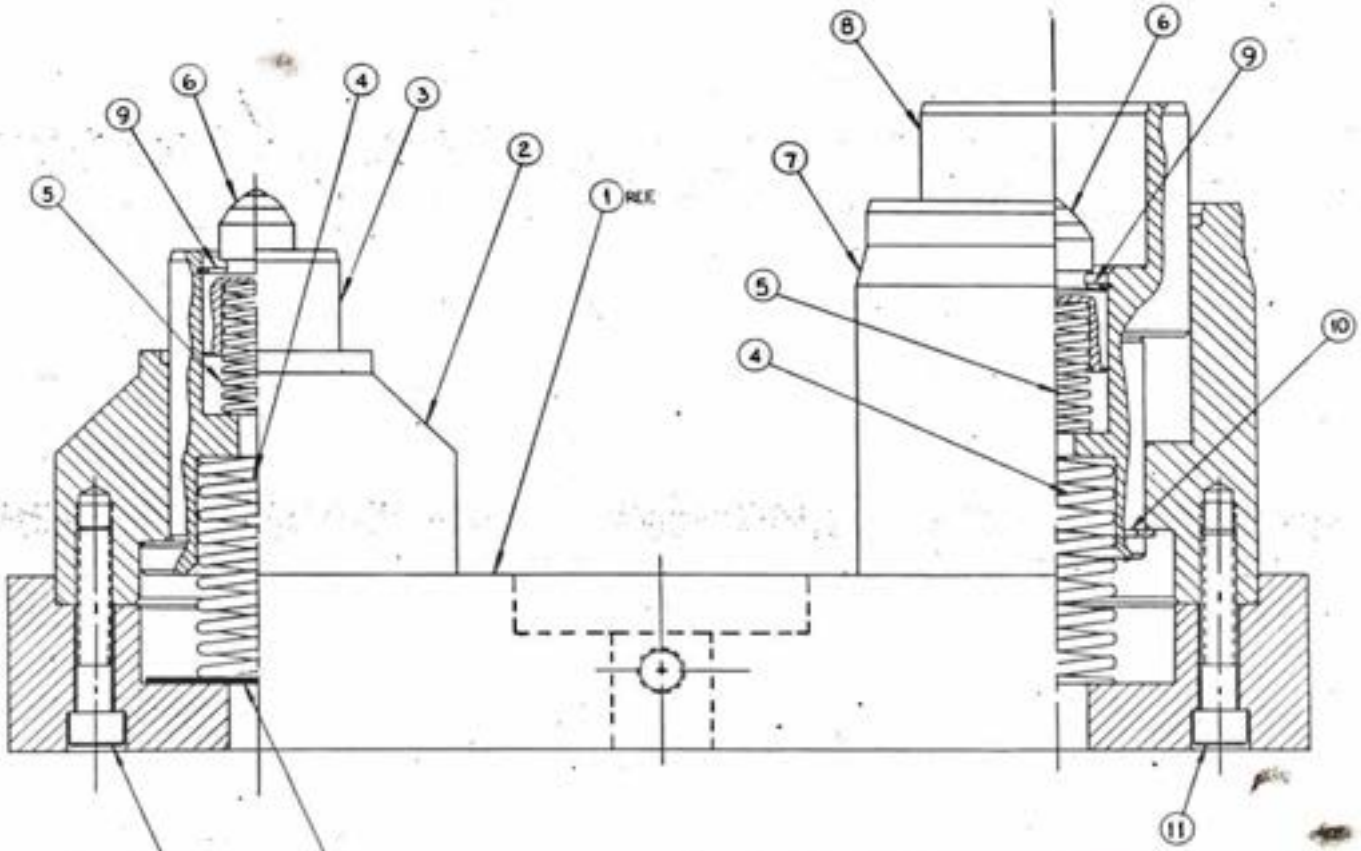

TIGHTEN TO
545 IN-Lbs (45 FT-Lbs)
TYP. 8 PLC'S.

REV	LOC	DESCRIPTION	BOD	DATE

THIS DRAWING IS THE PROPERTY OF WOLFF MANUFACTURING CO. AND IS NOT TO BE USED OR REPRODUCED WITHOUT WRITTEN PERMISSION

TOLERANCES UNLESS OTHERWISE SPECIFIED:
FABRICATED DIM'S ± 1/16
FRACTIONAL DIM'S ± 1/64
DECIMAL DIM'S ± .010
INSIDE RADIUS 1/32
ANGULAR DIMENSIONS ± 1/2°
SURFACE Finish 125
REMOVE ALL SHARP EDGES

DO NOT SCALE DRAWING

WOLFF MANUFACTURING COMPANY
1811 Adrian Road, Burlingame, California 94010 U.S.A.
Telephone (415) 692-5010 Telex 348-414
CABLE SALERCO BURLINGAME

MATERIAL: SEE B.M.

PART DESCRIPTION: ASSEMBLY TOOL SET DEN PPR 5 1/8" PITCH

SCALE: FULL | DATE: 8/11/87 | DRAWN: R.B.J. | CHKD: R. KIPNIS, C. R. GRAY

NEXT ASSEMBLY

USED ON: 85 SERIES TOOLING /2 REQ

PART NUMBER

SIZE: C | DRAWING NUMBER: 952004 | REV

BILL OF MATERIALS

	ITEM	PART NO.	QTY	DESCRIPTION	MAT'L	ESTIMATED EST	ACT	GROSS WT
REF.	1	C/958003	(1)	TOOL BAR 9.45 PITCH	4140			
	2	B/955703	1	PIN ASSEMBLY TOOL SLEEVE	4140			
	3	B/955503	1	PIN ASSEMBLY TOOL INSERT	4140			
	4	519-069	2	DIE SPRING (3½" FREE LG., 1¾" O.D.)				
	5	519-070	2	DIE SPRING (1½" FREE LG., 3/4 OD, 3/8 ID)				
	6	A/955601	2	LOCATING PIN				
	7	B/956703	1	BUSHING ASSEMBLY TOOL SLEEVE	4140			
	8	B/956503	1	BUSHING ASSEMBLY TOOL INSERT	4140			
	9	529-043	2	RETAINING RING-INTERNAL, 1.500 O.D.				
	10	529-813	1	RETAINING RING-INTERNAL, 1.500 O.D.				
	11	529-207	8	S.H.C.S. ½"-13NC × 2" LG				
	12	A/957002	4	SHIM .020 (.5mm) THICK, 2 7/16 O.D.				
REF.	13	C/958005	(1)	TOOL BAR 9.00 PITCH				

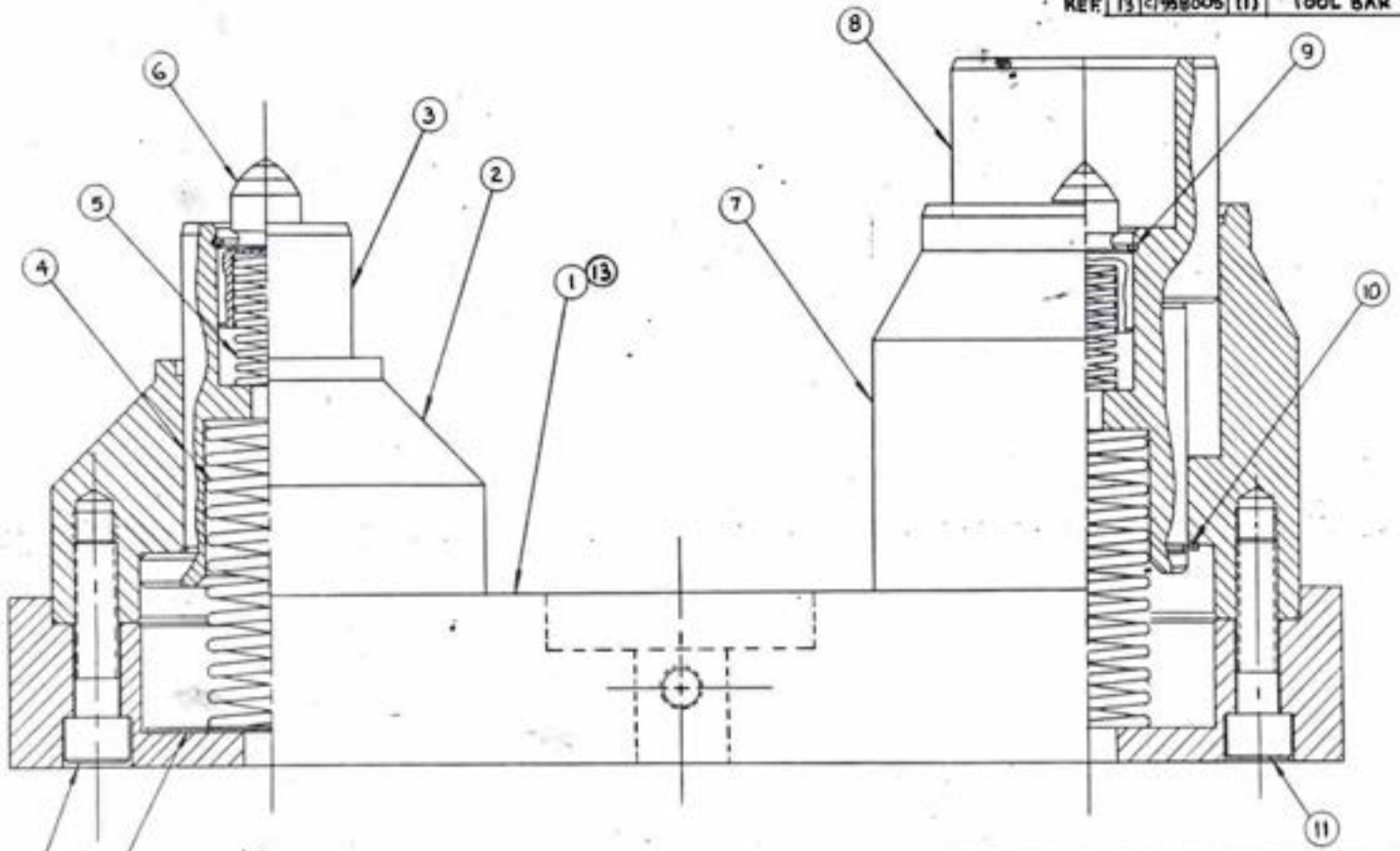

TIGHTEN TO 1300 IN-Lbs (108 FT-Lbs) TYP 8 PLC'S

REV	LTR	DESCRIPTION	ECO	DATE
A		ITEM 13 ADDED WELD #6238		3/23/88

THIS DRAWING IS THE PROPERTY OF WOLFF MANUFACTURING CO. AND IS NOT TO BE USED OR REPRODUCED WITHOUT WRITTEN PERMISSION.

TOLERANCES UNLESS OTHERWISE SPECIFIED:
FABRICATED DIM'S ± 1/16
FRACTIONAL DIM'S ± 1/64
DECIMAL DIM'S ± .010
INSIDE RADIUS 1/32
ANGULAR DIMENSIONS ± 1/2°
SURFACE FINISH 125
REMOVE ALL SHARP EDGES
DO NOT SCALE DRAWING

WOLFF MANUFACTURING COMPANY
1011 Adrian Road, Burlingame, California 94010 U.S.A.
Telephone (415) 692-1010 Telex 348-414
CABLE SALENCO BURLINGAME

MATERIAL: SEE B.M.

PART DESCRIPTION: ASSEMBLY TOOL SET D9N PPR 9.45 PITCH & D9L PPR 9.00 PITCH

SCALE: FULL | DATE: 11/19/87 | DRAWN: A.B.O. | CHK'D: C.B. 6-30-88

NEXT ASSEMBLY: ——

USED ON: 95 SERIES TOOLING

PART NUMBER:

SIZE: C | DRAWING NUMBER: 952003 | REV: A

DO NOT SCALE DRAWINGS

BREAK ALL SHARP EDGES

BILL OF MATERIALS

ITEM	PART NO.	QTY.	DESCRIPTION	MAT'L	LENGTH FT.	LENGTH IN.	WEIGHT LBS.
REF. 1	C956002	(1)	TOOL BAR	HR 4140			
2	8958702	1	PIN ASSEMBLY TOOL SLEEVE	HR 4340			
3	8958502	1	PIN ASSEMBLY TOOL INSERT	HR 4340			
4	515-065	2	DIE SPRING (3½ FREE LG., 1½" HOLE DIA.)				
5	515-070	2	DIE SPRING (1⅞ FREE LG., ¾" O.D., ⅝" I.D.)				
6	A985601	2	LOCATING PIN				
7	8956702	1	BUSHING ASSEMBLY TOOL SLEEVE	HR 4340			
8	8956502	1	BUSHING ASSEMBLY TOOL INSERT	HR 4340			
9	529-1043	2	RETAINING RING-INTERNAL, W TRUARC #5000-112				
10	529-815	1	RETAINING RING-EXTERNAL, W TRUARC #5100-237				
11	529-807	8	S.H.C.S., ½-13 UNC		0	8	
12	A957002	8	SHIM, GED (5 mm) THICK, 2⅜ O.D.				

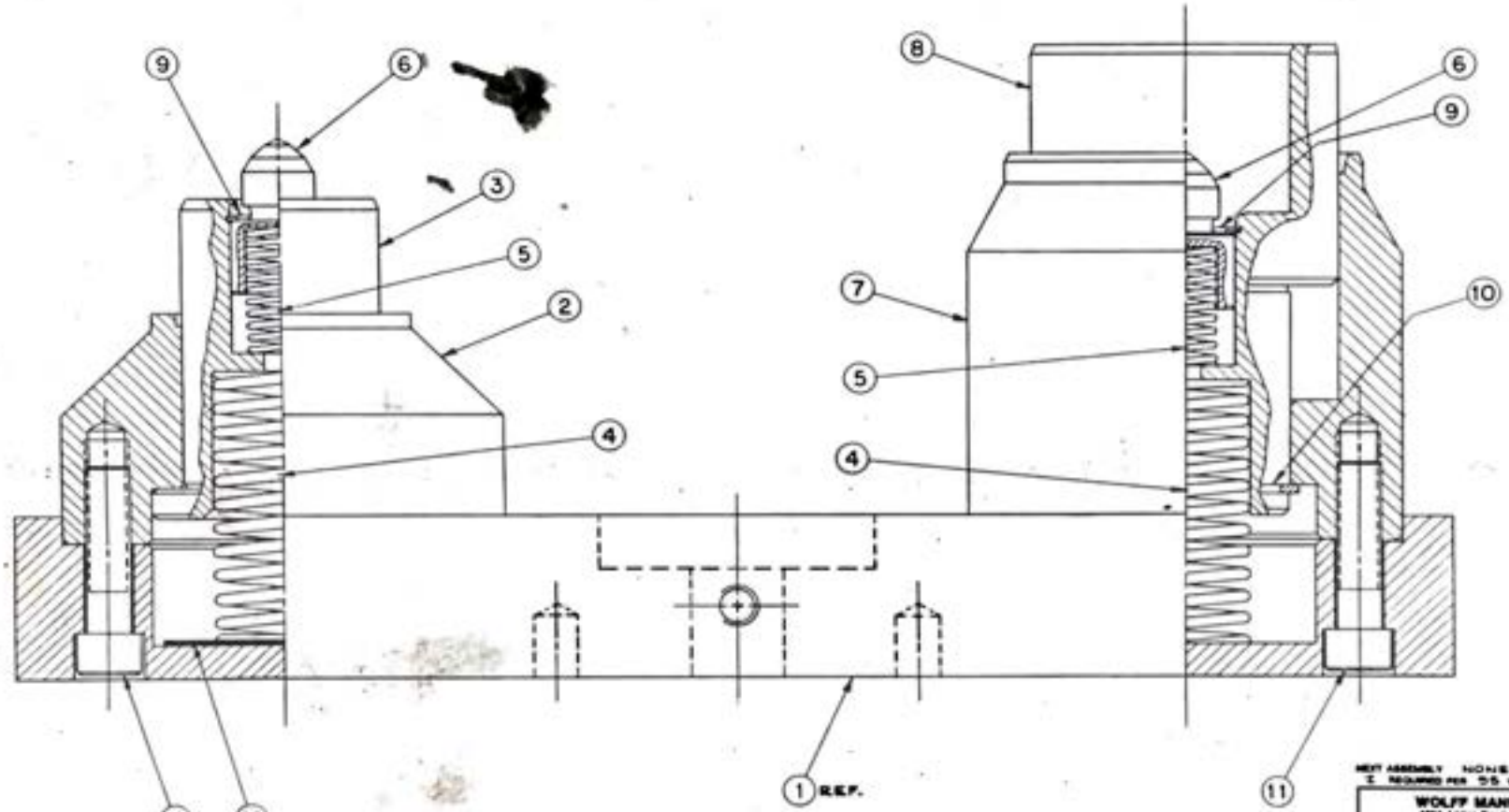

TIGHTEN TO
1500 IN-LBS (108 FT-LBS)
TYP. 8 PLCS

NEXT ASSEMBLY NONE
1 REQUIRED PER 55 SERIES TOOLING SET

WOLFF MANUFACTURING COMPANY
1811 Airline Road, Burlingame, California 94010 U.S.A.
Telephone (415) 342-6212 Telex 348414
CABLE SALENCO BURLINGAME

MATERIAL: SEE B.M.	PART DESCRIPTION: ASSEMBLY TOOL SET DION PPR 10¾ PITCH
SCALE: FULL	DATE: 7/1/67
DRAWN: D.M.D.	
SIZE: C	PART NUMBER: 952002

THIS DRAWING IS THE PROPERTY OF WOLFF MANUFACTURING CO. AND IS NOT TO BE USED OR REPRODUCED WITHOUT PERMISSION.

N.E.R.O. #6223

REPORT ERRORS TO ENGINEERING DEPT.

IF IN DOUBT, ASK.

6.125 PITCH TOOL GROUP

CONTENTS

DESCRIPTION	QTY	REQUIRED I.D.	QTY	REQUIRED I.D.
SADDLE	1	D1054-017A		
TOOL MOUNT	4	757A		
SPACER, BUSHING	2	761		
PIN, DISASSEMBLY	2	812	2	1127
BUSHING, DISASSEMBLY	2	811		
PIN HOLDER, ASSEMBLY	2	816		
PIN INSERT, ASSEMBLY	2	814		
BUSH HOLDER, ASSEMBLY	2	815		
BUSH INSERT, ASSEMBLY	2	813	2	1128
GAUGE PLATE, ASSEMBLY	1	36A		
SOC HD SCREW	4	36-0371		
SHIM (PIN)	5	B1927-022		
SPRING	6	56-0146		
SET SCREW	4	36-0261		
JAM NUT	4	36-0262		

CATERPILLAR 6.125 PITCH 1U6036

MODEL		D3 SEALED	D3,931 SEALED	D3B/D4B SEALED	D3,931	D3,931
LINK ASSEMBLY		6S3142	6S9605	6Y1711	6S9066	6Y1339
PIN SIZE		1.127ØX6.156	1.127ØX6.156	1.127ØX6.156	1.128ØX6.161	1.128ØX6.161
BUSHING SIZE		1.850ØX4.222	1.850ØX4.222	1.850/1.969ØX4.222	1.850ØX3.707	1.850/1.980ØX3.707
DESCRIPTION	QTY					
SADDLE	1	D1054-017A	D1054-017A	D1054-017A	D1054-017A	D1054-017A
TOOL MOUNT	4	757A	757A	757A	757A	757A
SPACER, BUSHING	2	761	761	N/A	N/A	N/A
PIN TOOL DISASS'Y	2	1127	1127	1127	812	812
BUSHING TOOL DISASS'Y	2	811	811	811	811	811
PIN HOLDER ASS'Y	2	816	816	816	816	816
PIN INSERT ASS'Y	2	814	814	814	814	814
BUSHING HOLDER ASS'Y	2	815	815	815	815	815
BUSHING INSERT ASS'Y	2	1128	1128	1128	813	813
SPRING	4	56-0146	56-0146	56-0146	56-0146	56-0146
GAUGE PLATE	1	36A	36A	36A	N/A	N/A
SET SCREW	4	36-0261	36-0261	36-0261	36-0261	36-0261
JAM NUT	4	36-0262	36-0262	36-0262	36-0262	36-0262
SOC HD SCREW	4	36-0371	36-0371	36-0371	36-0371	36[illegible]
SHIM (PIN)	5	B1927-022	B1927-022	B1927-022	B1927-022	B1927-022

6.125 PITCH TOOL GROUP

CONTENTS

DESCRIPTION	QTY	REQUIRED I.D.	QTY	REQUIRED I.D.
SADDLE	1	D1054-017A		
TOOL MOUNT	4	757A		
SPACER, BUSHING	2	761		
PIN, DISASSEMBLY	2	812	2	1127
BUSHING, DISASSEMBLY	2	811		
PIN HOLDER, ASSEMBLY	2	816		
PIN INSERT, ASSEMBLY	2	814		
BUSH HOLDER, ASSEMBLY	2	815		
BUSH INSERT, ASSEMBLY	2	813	2	1128
GAUGE PLATE, ASSEMBLY	1	36A		
SOC HD SCREW	4	36-0371		
SHIM (PIN)	5	B1927-022		
SPRING	6	56-0146		
SET SCREW	4	36-0261		
JAM NUT	4	36-0262		

6.735 PITCH TOOL GROUP

CONTENTS

DESCRIPTION	QTY	REQUIRED I.D.	QTY	REQUIRED I.D.
SADDLE	1	D1054-001A	1	D1054-004
SADDLE	1	D1054-023		
TOOL MOUNT	4	760A		
SPACER, BUSHING	2	789	2	835
SPACER, BUSHING	2	668	2	917
PIN, DISASSEMBLY	2	914	2	1146
PIN, DISASSEMBLY	2	791		
BUSHING DISASSEMBLY	2	1145	2	911
BUSHING DISASSEMBLY	2	1144		
PIN HOLDER, ASSEMBLY	2	795	2	686
PIN INSERT, ASSEMBLY	2	793	2	688
PIN INSERT, ASSEMBLY	2	1175		
BUSH HOLDER, ASSEMBLY	2	794A	2	836A
BUSH HOLDER, ASSEMBLY	2	685A	2	912A
BUSH HOLDER, ASSEMBLY	2	915A	2	919A
BUSH INSERT, ASSEMBLY	2	792	2	837
BUSH INSERT, ASSEMBLY	2	687	2	913
GAUGE PLATE	1	32	1	27
GAUGE PLATE	1	916	1	1391
GAUGE PLATE	1	1392	1	1393
SHIM (PIN)	10	A2904-001		
SPRING	12	56-0146		
SET SCREW	8	36-0261		
JAM NUT	8	36-0262		
SOC HD SCREW	8	36-0371		

7/15/88

CATERPILLAR 6.735 PITCH 1U6035

MODEL		D4C&D SEALED	D4C&D SEALED	D4C&D SEALED	D4C,D&E SEALED	D6B SEALED
LINK ASSEMBLY		4K7128	4K7136	7K2049	1V7073,1V7075	2S7579,2S7577
PIN SIZE		1.314ØX7.00	1.314ØX7.00	1.314ØX7.000	1.314ØX7.22	1.442ØX8.125
BUSHING SIZE		1.994ØX4.804	1.994ØX4.804	2.119ØX4.804	2.119ØX4.996	2.119ØX5.704
DESCRIPTION	QTY	1/2 BOLT	9/16 BOLT	9/16 BOLT	5/8 BOLT	
SADDLE	1	D1054-004	D1054-004	D1054-004	D1054-004	D1054-001A
TOOL MOUNT	4	760A	760A	760A	760A	760A
SPACER, BUSHING	2	789	789	835	N/A	668
PIN TOOL DISASS'Y	2	914	914	914	914	1146
BUSHING TOOL DISASS'Y	2	1145	1145	911	911	911
PIN HOLDER ASS'Y	2	795	795	795	795	686
PIN INSERT ASS'Y	2	793	793	793	793	688
BUSHING HOLDER ASS'Y	2	794A	794A	836A	919A	685A
BUSHING INSERT ASS'Y	2	792	792	837	837	687
SPRING		56-0146	56-0146	56-0146	56-0146	56-0146
GAUGE PLATE		32	1391	1391	1392	27
SET SCREW	4	36-0261	36-0261	36-0261	36-0261	36-0261
JAM NUT	4	36-0262	36-0262	36-0262	36-0262	36-0262
SOC HD SCREW	4	36-0371	36-0371	36-0371	36-0371	36-0371
SHIM (PIN)	[illegible]	A2904-001	A2904-001	A2901-001	A2904-001	A2904-001

7/15/88

CATERPILLAR 6.735 PITCH 1U6035

MODEL		213 EXC SEALED	215 EXC SEALED	215 EXC SEALED	225 EXC SEALED
LINK ASSEMBLY		5w4165	6T0511	6A4713	8K0323
PIN SIZE			1.314ØX7.222	1.314ØX6.366	1.314ØX7.22
BUSHING SIZE			2.119ØX4.996	2.118ØX4.169	2.119ØX4.996
DESCRIPTION	QTY		5/8 BOLT	9/16 BOLT	5/8 BOLT
SADDLE	1		D1054-023	D1054-023	D1054-004
TOOL MOUNT	4		760A	760A	760A
SPACER, BUSHING	2		917	835	917
PIN TOOL DISASS'Y	2		914	914	914
BUSHING TOOL DISASS'Y	2		911	911	911
PIN HOLDER ASS'Y	2		795	795	795
PIN INSERT ASS'Y	2		793	793	793
BUSHING HOLDER ASS'Y	2		919A	915A	919A
BUSHING INSERT ASS'Y	2		837	837	837
SPRING	4		56-0146	56-0146	56-0146
GAUGE PLATE	1		1393	916	1392
SET SCREW	4		36-0261	36-0261	36-0261
JAM NUT	4		36-0262	36-0262	36-0262
SOC HD SCREW	4		36-0371	36-0371	36-0371
SHIM (PIN)	5		A2901-001	A2901-001	A2904-001

CATERPILLAR 6.735 PITCH 1U6035

MODEL		D4C&D	943 HI RAIL	D4H
LINK ASSEMBLY		1V4599	7T4629	3T0352
PIN SIZE		1.315ØX7.220	1.315ØX7.22	1.315ØX7.22
BUSHING SIZE		2.119ØX4.437	2.119 / 2.244 ØX4.437	2.205ØX4.437
DESCRIPTION	QTY			
SADDLE	1	D1054-004	D1054-001A	D1054-001A
TOOL MOUNT	4	760A	760A	760A
SPACER, BUSHING	2	N/A	N/A	N/A
PIN TOOL DISASS'Y	2	791	791	791
BUSHING TOOL DISASS'Y	2	911	911	1144
PIN HOLDER ASS'Y	2	795	795	795
PIN INSERT ASS'Y	2	793	1175	1175
BUSHING HOLDER ASS'Y	2	912A	912A	912A
BUSHING INSERT ASS'Y	2	913	913	913
SPRING	4	56-0146	56-0146	56-0146
GAUGE PLATE	1	N/A	N/A	N/A
SET SCREW	4	36-0261	36-0261	36-0261
JAM NUT	4	36-0262	36-0262	36-0262
SOC HD SCREW	4	36-0371	36-0371	36-0371
SHIM (PIN)	5	A2904-001	A2904-001	A2904-001

6.735 PITCH TOOL GROUP

CONTENTS

DESCRIPTION	QTY	REQUIRED I.D.	QTY	REQUIRED I.D.
SADDLE	1	D1054-001A	1	D1054-004
SADDLE	1	D1054-023		
TOOL MOUNT	4	760A		
SPACER, BUSHING	2	789	2	835
SPACER, BUSHING	2	668	2	917
PIN, DISASSEMBLY	2	914	2	1146
PIN, DISASSEMBLY	2	791		
BUSHING DISASSEMBLY	2	1145	2	911
BUSHING DISASSEMBLY	2	1144		
PIN HOLDER, ASSEMBLY	2	795	2	686
PIN INSERT, ASSEMBLY	2	793	2	688
PIN INSERT, ASSEMBLY	2	1175		
BUSH HOLDER, ASSEMBLY	2	794A	2	836A
BUSH HOLDER, ASSEMBLY	2	685A	2	912A
BUSH HOLDER, ASSEMBLY	2	915A	2	919A
BUSH INSERT, ASSEMBLY	2	792	2	837
BUSH INSERT, ASSEMBLY	2	687	2	913
GAUGE PLATE	1	32	1	27
GAUGE PLATE	1	916	1	1391
GAUGE PLATE	1	1392	1	1393
SHIM (PIN)	10	A2904-001		
SPRING	12	56-0146		
SET SCREW	8	36-0261		
JAM NUT	8	36-0262		
SOC HD SCREW	8	36-0371		

7/15/88

CATERPILLAR 6.735 PITCH 1U6035

MODEL		D4C&D SEALED	D4C&D SEALED	D4C&D SEALED	D4C,D&E SEALED	D6B SEALED
LINK ASSEMBLY		4K7128	4K7136	7K2049	1V7073,1V7075	2S7579,2S7577
PIN SIZE		1.314ØX7.00	1.314ØX7.00	1,314ØX7.000	1.314ØX7.22	1.442ØX8.125
BUSHING SIZE		1.994ØX4.804	1.994ØX4.804	2.119ØX4.804	2.119ØX4.996	2.119ØX5.704
DESCRIPTION	QTY	1/2 BOLT	9/16 BOLT	9/16 BOLT	5/8 BOLT	
SADDLE	1	D1054-004	D1054-004	D1054-004	D1054-004	D1054-001A
TOOL MOUNT	4	760A	760A	760A	760A	760A
SPACER, BUSHING	2	789	789	835	N/A	668
PIN TOOL DISASS'Y	2	914	914	914	914	1146
BUSHING TOOL DISASS'Y	2	1145	1145	911	911	911
PIN HOLDER ASS'Y	2	795	795	795	795	686
PIN INSERT ASS'Y	2	793	793	793	793	688
BUSHING HOLDER ASS'Y	2	794A	794A	836A	919A	685A
BUSHING INSERT ASS'Y	2	792	792	837	837	687
SPRING	4	56-0146	56-0146	56-0146	56-0146	56-0146
GAUGE PLATE	1	32	1391	1391	1392	27
SET SCREW	4	36-0261	36-0261	36-0261	36-0261	36-0261
JAM NUT	4	36-0262	36-0262	36-0262	36-0262	36-0262
SOC HD SCREW	4	36-0371	36-0371	36-0371	36-0371	36-0371
SHIM (PIN)	5	A2904-001	A2904-001	A2901-001	A2904-001	A2904-001

7/15/88

CATERPILLAR 6.735 PITCH 1U6035

MODEL		213 EXC SEALED	215 EXC SEALED	215 EXC SEALED	225 EXC SEALED
LINK ASSEMBLY		5w4165	6T0511	6A4713	8K0323
PIN SIZE			1.314ØX7.222	1.314ØX6.366	1.314ØX7.22
BUSHING SIZE			2.119ØX4.996	2.118ØX4.169	2.119ØX4.996
DESCRIPTION	QTY		5/8 BOLT	9/16 BOLT	5/8 BOLT
SADDLE	1		D1054-023	D1054-023	D1054-004
TOOL MOUNT	4		760A	760A	760A
SPACER, BUSHING	2		917	835	917
PIN TOOL DISASS'Y	2		914	914	914
BUSHING TOOL DISASS'Y	2		911	911	911
PIN HOLDER ASS'Y	2		795	795	795
PIN INSERT ASS'Y	2		793	793	793
BUSHING HOLDER ASS'Y	2		919A	915A	919A
BUSHING INSERT ASS'Y	2		837	837	837
SPRING	4		56-0146	56-0146	56-0146
GAUGE PLATE	1		1393	916	1392
SET SCREW	4		36-0261	36-0261	36-0261
JAM NUT	4		36-0262	36-0262	36-0262
SOC HD SCREW	4		36-0371	36-0371	36-0371
SHIM (PIN)	5		A2901-001	A2901-001	A2904-001

7/15/88

CATERPILLAR 6.735 PITCH 1U6035

0-4.96-0
-P 0-340-0

MODEL		D4C&D	943 HI RAIL	D4H
LINK ASSEMBLY		1V4599	7T4629	3T0352
PIN SIZE		1.315ØX7.220	1.315ØX7.22	1.315ØX7.22
BUSHING SIZE		2.119ØX4.437	2.119 / 2.244 ØX4.437	2.205ØX4.437
DESCRIPTION	QTY			
SADDLE	1	D1054-004	D1054-001A	D1054-001A
TOOL MOUNT	4	760A	760A	760A
SPACER, BUSHING	2	N/A	N/A	N/A
PIN TOOL DISASS'Y	2	791	791	791
BUSHING TOOL DISASS'Y	2	911	911	1144
PIN HOLDER ASS'Y	2	795	795	795
PIN INSERT ASS'Y	2	793	1175	1175
BUSHING HOLDER ASS'Y	2	912A	912A	912A
BUSHING INSERT ASS'Y	2	913	913	913
SPRING	4	56-0146	56-0146	56-0146
GAUGE PLATE	1	N/A	N/A	N/A
SET SCREW	4	36-0261	36-0261	36-0261
JAM NUT	4	36-0262	36-0262	36-0262
SOC HD SCREW	4	36-0371	36-0371	36-0371
SHIM (PIN)	5	A2904-001	A2904-001	A2904-001

7/15/88

6.735 PITCH TOOL GROUP

CONTENTS

DESCRIPTION	REQUIRED QTY	REQUIRED I.D.	REQUIRED QTY	REQUIRED I.D.
SADDLE	1	D1054-001A	1	D1054-004
SADDLE	1	D1054-023		
TOOL MOUNT	4	760A		
SPACER, BUSHING	2	789	2	835
SPACER, BUSHING	2	668	2	917
PIN, DISASSEMBLY	2	914	2	1146
PIN, DISASSEMBLY	2	791		
BUSHING DISASSEMBLY	2	1145	2	911
BUSHING DISASSEMBLY	2	1144		
PIN HOLDER, ASSEMBLY	2	795	2	686
PIN INSERT, ASSEMBLY	2	793	2	688
PIN INSERT, ASSEMBLY	2	1175		
BUSH HOLDER, ASSEMBLY	2	794A	2	836A
BUSH HOLDER, ASSEMBLY	2	685A	2	912A
BUSH HOLDER, ASSEMBLY	2	915A	2	919A
BUSH INSERT, ASSEMBLY	2	792	2	837
BUSH INSERT, ASSEMBLY	2	687	2	913
GAUGE PLATE	1	32	1	27
GAUGE PLATE	1	916	1	1391
GAUGE PLATE	1	1392	1	1393
SHIM (PIN)	10	A2904-001		
SPRING	12	56-0146		
SET SCREW	8	36-0261		
JAM NUT	8	36-0262		
SOC HD SCREW	8	36-0371		

7/15/88

CATERPILLAR 6.906 PITCH 1U6034

MODEL LINK ASSEMBLY PIN SIZE BUSHING SIZE DESCRIPTION	QTY	977(OPT)SEALED (FORMER) 1.442ØX8.125 2.312ØX5.704	D5B SEALED 3P5757 1.442ØX8.125 2.312ØX5.704	D5B 3P3885 1.443ØX8.122 2.312ØX5.214	953 HI RAIL 7T4637 1.443ØX8.122 2.312/2.441ØX5.214	D5 PRO 9W8844 1.443ØX8.122 2.312/2.441ØX5.214
SADDLE	1	D1054-007	D1054-007	D1054-007	D1054-029	D1054-029
TOOL MOUNT	4	565A	565A	565A	565A	565A
SPACER, BUSHING	2	696	696	N/A	N/A	N/A
PIN TOOL DISASS'Y	2	1129A	1129A	735	735	735
BUSHING TOOL DISASS'Y	2	736	736	736	736	736
PIN HOLDER ASS'Y	2	738	738	738	1091A	1091A
PIN INSERT ASS'Y	2	740B	740B	740B	740B	740B
BUSHING HOLDER ASS'Y	2	737A	737A	737A	737A	737A
BUSHING INSERT ASS'Y	2	1130	1130	739	739	739
SPRING	4	56-0146	56-0146	56-0146	56-0146	56-0146
GAUGE PLATE	1	26	26	N/A	N/A	N/A
SET SCREW	4	36-0261	36-0261	36-0261	36-0261	36-0261
JAM NUT	4	36-0262	36-0262	36-0262	36-0262	36-0262
SOC HD SCREW	4	36-0371	36-0371	36-0371	36-0371	36-0371
SHIM (PIN)	5	A2904-001	A2904-001	A2904-001	A2904-001	A2904-001

6.906 PITCH TOOL GROUP

CONTENTS

DESCRIPTION	REQUIRED QTY	REQUIRED I.D.	REQUIRED QTY	REQUIRED I.D.
SADDLE	1	D1054-007	1	D1054-029
TOOL MOUNT	4	565A		
SPACER, BUSHING	2	696		
PIN, DISASSEMBLY	2	735	2	1129A
BUSHING, DISASSEMBLY	2	736		
PIN HOLDER, ASSEMBLY	2	738	2	1091A
PIN INSERT, ASSEMBLY	2	740B		
BUSH HOLDER, ASSEMBLY	2	737A		
BUSH INSERT, ASSEMBLY	2	739	2	1130
GAUGE PLATE, ASSEMBLY	1	26		
SOC HD SCREW	4	36-0371		
SHIM (PIN)	5	A2904-001		
SPRING	8	56-0146		
SET SCREW	6	36-0261		
JAM NUT	6	36-0262		

7/15/88

CATERPILLAR 6.906 PITCH 1U6034

MODEL		977(OPT)SEALED (FORMER)	D5B SEALED	D5B	953 HI RAIL	D5 PRO
LINK ASSEMBLY			3P5757	3P3885	7T4637	9W8844
PIN SIZE		1.442ØX8.125	1.442ØX8.125	1.443ØX8.122	1.443ØX8.122	1.443ØX8.122
BUSHING SIZE		2.312ØX5.704	2.312ØX5.704	2.312ØX5.214	2.312 / 2.441 ØX5.214	2.312 / 2.441 ØX5.214
DESCRIPTION	QTY					
SADDLE	1	D1054-007	D1054-007	D1054-007	D1054-029	D1054-029
TOOL MOUNT	4	565A	565A	565A	565A	565A
SPACER, BUSHING	2	696	696	N/A	N/A	N/A
PIN TOOL DISASS'Y	2	1129A	1129A	735	735	735
BUSHING TOOL DISASS'Y	2	736	736	736	736	736
PIN HOLDER ASS'Y	2	738	738	738	1091A	1091A
PIN INSERT ASS'Y	2	740B	740B	740B	740B	740B
BUSHING HOLDER ASS'Y	2	737A	737A	737A	737A	737A
BUSHING INSERT ASS'Y	2	1130	1130	739	739	739
SPRING	4	56-0146	56-0146	56-0146	56-0146	56-0146
GAUGE PLATE	1	26	26	N/A	N/A	N/A
SET SCREW	4	36-0261	36-0261	36-0261	36-0261	36-0261
JAM NUT	4	36-0262	36-0262	36-0262	36-0262	36-0262
SOC HD SCREW	4	36-0371	36-0371	36-0371	36-0371	36-0371
SHIM (PIN)	5	A2904-001	A2904-001	A2904-001	A2904-001	A2904-001

7/15/88

6.906 PITCH TOOL GROUP

CONTENTS

DESCRIPTION	QTY	REQUIRED I.D.	QTY	REQUIRED I.D.
SADDLE	1	D1054-007	1	D1054-029
TOOL MOUNT	4	565A		
SPACER, BUSHING	2	696		
PIN, DISASSEMBLY	2	735	2	1129A
BUSHING, DISASSEMBLY	2	736		
PIN HOLDER, ASSEMBLY	2	738	2	1091A
PIN INSERT, ASSEMBLY	2	740B		
BUSH HOLDER, ASSEMBLY	2	737A		
BUSH INSERT, ASSEMBLY	2	739	2	1130
GAUGE PLATE, ASSEMBLY	1	26		
SOC HD SCREW	4	36-0371		
SHIM (PIN)	5	A2904-001		
SPRING	8	56-0146		
SET SCREW	6	36-0261		
JAM NUT	6	36-0262		

CATERPILLAR 7.480 PITCH 1U6117

MODEL		D5H	D5H QUAD LINK	225B EXC SEALED
LINK ASSEMBLY		3T8581	9W4185	9W6775
PIN SIZE		1.443ØX8.122	1.443ØX8.125	1.442ØX8.125
BUSHING SIZE		2.413 / 2.531 ØX5.214	2.413ØX5.214	2.312ØX5.704
DESCRIPTION	QTY			
SADDLE	1	D1054-027	D1054-027	D1054-039
TOOL MOUNT	4	510A	510A	510A
SPACER, BUSHING	2	N/A	N/A	696
PIN TOOL DISASS'Y	2	735	735	1129A
BUSHING TOOL DISASS'Y	2	736	736	736
PIN HOLDER ASS'Y	2	1091A	1091A	738
PIN INSERT ASS'Y	2	740B	740B	740B
BUSHING HOLDER ASS'Y	2	1092A	1092A	737A
BUSHING INSERT ASS'Y	2	1093	1093	1130
SPRING	4	56-0146	56-0146	56-0146
GAUGE PLATE	1	N/A	N/A	1387
SET SCREW	4	36-0261	36-0261	36-0261
JAM NUT	4	36-0262	36-0262	36-0262
SOC HD SCREW	4	36-0259	36-0259	36-0259
SHIM (PIN)	5	A2904-001	A2904-001	A2904-001

7.480 PITCH TOOL GROUP

CONTENTS

DESCRIPTION	QTY	REQUIRED I.D.	QTY	REQUIRED I.D.
SADDLE	1	D1054-027		D1054-039
TOOL MOUNT	4	510		
PIN, DISASSEMBLY	2	735	2	1129A
BUSHING, DISASSEMBLY	2	736		
PIN HOLDER, ASSEMBLY	2	1091A	2	738
PIN INSERT, ASSEMBLY	2	740B		
BUSH HOLDER, ASSEMBLY	2	1092A	2	737A
BUSH INSERT, ASSEMBLY	2	1093	2	1130
SPACER, BUSHING	2	696		
GAUGE PLATE	1	1387		
SHIM (PIN)	5	A2904-001		
SPRING	4	56-0146		
SET SCREW	4	36-0261		
JAM NUT	4	36-0262		
SOC HD SCREW	4	36-0259		

7/15/88

CATERPILLAR 7.480 PITCH 1U6117

MODEL		D5H	D5H QUAD LINK	225B EXC SEALED
LINK ASSEMBLY		3T8581	9W4185	9W6775
PIN SIZE		1.443ØX8.122	1.443ØX8.125	1.442ØX8.125
BUSHING SIZE		2.413 / 2.531 ØX5.214	2.413ØX5.214	2.312ØX5.704
DESCRIPTION	QTY			
SADDLE	1	D1054-027	D1054-027	D1054-039
TOOL MOUNT	4	510A	510A	510A
SPACER, BUSHING	2	N/A	N/A	696
PIN TOOL DISASS'Y	2	735	735	1129A
BUSHING TOOL DISASS'Y	2	736	736	736
PIN HOLDER ASS'Y	2	1091A	1091A	738
PIN INSERT ASS'Y	2	740B	740B	740B
BUSHING HOLDER ASS'Y	2	1092A	1092A	737A
BUSHING INSERT ASS'Y	2	1093	1093	1130
SPRING	4	56-0146	56-0146	56-0146
GAUGE PLATE	1	N/A	N/A	1387
SET SCREW	4	36-0261	36-0261	36-0261
JAM NUT	4	36-0262	36-0262	36-0262
SOC HD SCREW	4	36-0259	36-0259	36-0259
SHIM (PIN)	5	A2904-001	A2904-001	A2904-001

7.480 PITCH TOOL GROUP

CONTENTS

DESCRIPTION	REQUIRED QTY	REQUIRED I.D.	REQUIRED QTY	REQUIRED I.D.
SADDLE	1	D1054-027		D1054-039
TOOL MOUNT	4	510		
PIN, DISASSEMBLY	2	735	2	1129A
BUSHING, DISASSEMBLY	2	736		
PIN HOLDER, ASSEMBLY	2	1091A	2	738
PIN INSERT, ASSEMBLY	2	740B		
BUSH HOLDER, ASSEMBLY	2	1092A	2	739A
BUSH INSERT, ASSEMBLY	2	1093	2	1130
SPACER, BUSHING	2	696		
GAUGE PLATE	1	1387		
SHIM (PIN)	5	A2904-001		
SPRING	4	56-0146		
SET SCREW	4	36-0261		
JAM NUT	4	36-0262		
SOC HD SCREW	4	36-0259		

CATERPILLAR 7.985 PITCH 1U6032

MODEL LINK ASSEMBLY PIN SIZE BUSHING SIZE DESCRIPTION	QTY	D6 SEALED (FORMER) 8S5235 1.752ØX9.06 2.621ØX6.365	D6C&D SEALED 3P1088 1.752ØX9.06 2.621ØX6.365	D7C&D SEALED 1S6877 1.752ØX9.875 2.621ØX6.865 5/8 BOLT	D7C&D SEALED 1S6945 1.752ØX9.875 2.621ØX6.865 3/4 BOLT	D8D,E,F&G SEALED 1S8845 1.752ØX11.438 2.621/2.745ØX7.928	583 SEALED 1S8843 1.752ØX11.438 2.621/2.745ØX7.928	227 EXC SEALED 5N4583 1.752ØX9.06 2.621ØX6.365
SADDLE	1	D1054-032	D1054-032	D1054-032	D1054-032	D1054-032	D1054-032	D1054-032
TOOL MOUNT	4	677A	677A	677A	677A	677A	677A	677A
SPACER, BUSHING	2	723	723	689	689	775	775	689
PIN TOOL DISASS'Y	2	1134	1134	1132	1132	1133	1133	1134
BUSHING TOOL ASS'Y	2	1131	1131	1131	1131	1131	1131	1131
PIN HOLDER ASS'Y	2	726	726	1139A	1139A	1140A	1140A	726
PIN INSERT ASS'Y	2	728	728	728	728	1156	1156	1176
BUSHING HOLDER ASS'Y	2	725A	725A	725A	725A	1096A	1096A	725A
BUSHING INSERT ASS'Y	2	727	727	1136A	1136A	1137B	1137B	727
SPRING	4	56-0146	56-0146	56-0146	56-0146	56-0146	56-0146	56-0146
GAUGE PLATE	1	33	33	1394	28	25	25	33
ET SCREW	4	36-0261	36-0261	36-0261	36-0261	36-0261	36-0261	36-0261
JAM NUT	4	36-0262	36-0262	36-0262	36-0262	36-0262	36-0262	36-0262
SOC HD SCREW	4	36-0259	36-0259	36-0259	36-0259	36-0259	36-0259	36-0259
SHIM (PIN)	5	A2904-002	A2904-002	A2904-002	A2904-002	A2904-002	A2904-002	A2904-002

CATERPILLAR 7.985 PITCH 1U6032

MODEL		D6C&D	D6H	963 HI RAIL
LINK ASSEMBLY		3P1118	6Y3519	7T4651
PIN SIZE		1.753ØX9.06	1.753ØX9.06	1.753ØX9.06
BUSHING SIZE		2.621 / 2.746 ØX5.783	2.746ØX5.783	2.621 / 2.746 ØX5.783
DESCRIPTION	QTY			
SADDLE	1	D1054-032	D1054-032	D1054-032
TOOL MOUNT	4	677A	677A	677A
SPACER, BUSHING	2	N/A	N/A	N/A
PIN TOOL DISASS'Y	2	703	703	703
BUSHING TOOL ASS'Y	2	1131	704	1131
PIN HOLDER ASS'Y	2	1141A	1143B	726
PIN INSERT ASS'Y	2	728	728	1176
BUSHING HOLDER ASS'Y	2	1096A	1096A	725A
BUSHING INSERT ASS'Y	2	1383	1097	1138B
SPRING	4	56-0146	56-0146	56-0146
GAUGE PLATE	1	N/A	N/A	N/A
SET SCREW	4	36-0261	36-0261	36-0261
JAM NUT	4	36-0262	36-0262	36-0262
SOC HD SCREW	4	36-0259	36-0259	36-0259
SHIM (PIN)	5	A2904-002	A2904-002	A2904-002

7/15/88

7.985 PITCH TOOL GROUP

CONTENTS

DESCRIPTION	QTY	REQUIRED I.D.	QTY	REQUIRED I.D.
SADDLE	1	D1054-032		
TOOL MOUNT	4	677A		
SPACER, BUSHING	2	689	2	723
SPACER, BUSHING	2	775	2	920
PIN, DISASSEMBLY	2	1132	2	703
PIN, DISASSEMBLY	2	1134	2	1133
BUSHING DISASSEMBLY	2	1131	2	704
PIN HOLDER, ASSEMBLY	2	1143A		
PIN HOLDER, ASSEMBLY	2	1139A	2	1140A
PIN HOLDER, ASSEMBLY	2	726	2	1141A
PIN INSERT, ASSEMBLY	2	1176		
PIN INSERT, ASSEMBLY	2	728	2	1156
BUSH HOLDER, ASSEMBLY	2	725A	2	1096A
BUSH INSERT, ASSEMBLY	2	1136A	2	1137B
BUSH INSERT, ASSEMBLY	2	727	2	1097
BUSH INSERT, ASSEMBLY	2	1138B	2	1383
GAUGE PLATE, ASSEMBLY	1	28	1	25
GAUGE PLATE, ASSEMBLY	1	33	1	1394
SPRING	12	56-0146		
SET SCREW	10	36-0261		
JAM NUT	10	36-0262		
SOC HD SCREW	12	36-0259		
SHIM (PIN)	10	A2904-002		

7/15/88

CATERPILLAR 7.985 PITCH 1U6032

DR4955

MODEL		D6 SEALED (FORMER)	D6C&D SEALED	D7C&D SEALED	D7C&D SEALED	D8D,E,F&G SEALED	583 SEALED	227 EXC SEALED
LINK ASSEMBLY		8S5235	3P1088	1S6877	1S6945	1S8845	1S8843	5N4583
PIN SIZE		1.752ØX9.06	1.752ØX9.06	1.752ØX9.875	1.752ØX9.875	1.752ØX11.438	1.752ØX11.438	1.752ØX9.06
BUSHING SIZE		2.621ØX6.365	2.621ØX6.365	2.621ØX6.865	2.621ØX6.865	2.621 2.745 ØX7.928	2.621 2.745 ØX7.928	2.621ØX6.365
DESCRIPTION	QTY			5/8 BOLT	3/4 BOLT			
SADDLE	1	D1054-032	D1054-032	D1054-032	D1054-032	D1054-032	D1054-032	D1054-032
TOOL MOUNT	4	677A	677A	677A	677A	677A	677A	677A
SPACER, BUSHING	2	723	723	689	689	775	775	689
PIN TOOL DISASS'Y	2	1134	1134	1132	1132	1133	1133	1134
BUSHING TOOL ASS'Y	2	1131	1131	1131	1131	1131	1131	1131
PIN HOLDER ASS'Y	2	726	726	1139A	1139A	1140A	1140A	726
PIN INSERT ASS'Y	2	728	728	728	728	1156	1156	1176
BUSHING HOLDER ASS'Y	2	725A	725A	725A	725A	1096A	1096A	725A
BUSHING INSERT ASS'Y	2	727	727	1136A	1136A	1137B	1137B	727
SPRING	4	56-0146	56-0146	56-0146	56-0146	56-0146	56-0146	56-0146
GAUGE PLATE	1	33	33	1394	28	25	25	33
SET SCREW	4	36-0261	36-0261	36-0261	36-0261	36-0261	36-0261	36-0261
JAM NUT	4	36-0262	36-0262	36-0262	36-0262	36-0262	36-0262	36-0262
SOC HD SCREW	4	36-0259	36-0259	36-0259	36-0259	36-0259	36-0259	36-0259
SHIM (PIN)	5	A2904-002	A2904-002	A2904-002	A2904-002	A2904-002	A2904-002	A2904-002

7/15/88

CATERPILLAR 7.985 PITCH 1U6032

955 wet

953 Dry

MODEL		D6C&D	D6H	963 HI RAIL
LINK ASSEMBLY		3P1118	6Y3519	7T4651
PIN SIZE		1.753ØX9.06	1.753ØX9.06	1.753ØX9.06
BUSHING SIZE		2.621 / 2.746 ØX5.783	2.746ØX5.783	2.621 / 2.746 ØX5.78
DESCRIPTION	QTY			
SADDLE	1	D1054-032	D1054-032	D1054-032
TOOL MOUNT	4	677A	677A	677A
SPACER, BUSHING	2	N/A	N/A	N/A
PIN TOOL DISASS'Y	2	703	703	703
BUSHING TOOL ASS'Y	2	1131	704	1131
PIN HOLDER ASS'Y	2	1141A	1143B	726
PIN INSERT ASS'Y	2	728	728	1176
BUSHING HOLDER ASS'Y	2	1096A	1096A	725A
BUSHING INSERT ASS'Y	2	1383	1097	1138B
SPRING	4	56-0146	56-0146	56-0146
GAUGE PLATE	1	N/A	N/A	N/A
SET SCREW	4	36-0261	36-0261	36-0261
JAM NUT	4	36-0262	36-0262	36-0262
SOC HD SCREW	4	36-0259	36-0259	36-0259
SHIM (PIN)	5	A2904-002	A2904-002	A2904-002

1134
1131

7.985 PITCH TOOL GROUP

CONTENTS

DESCRIPTION	QTY	REQUIRED I.D.	QTY	REQUIRED I.D.
SADDLE	1	D1054-032		
TOOL MOUNT	4	677A		
SPACER, BUSHING	2	689	2	723
SPACER, BUSHING	2	775	2	920
PIN, DISASSEMBLY	2	1132	2	703
PIN, DISASSEMBLY	2	1134	2	1133
BUSHING DISASSEMBLY	2	1131	2	704
PIN HOLDER, ASSEMBLY	2	1143A		
PIN HOLDER, ASSEMBLY	2	1139A	2	1140A
PIN HOLDER, ASSEMBLY	2	726	2	1141A
PIN INSERT, ASSEMBLY	2	1176		
PIN INSERT, ASSEMBLY	2	728	2	1156
BUSH HOLDER, ASSEMBLY	2	725A	2	1096A
BUSH INSERT, ASSEMBLY	2	1136A	2	1137B
BUSH INSERT, ASSEMBLY	2	727	2	1097
BUSH INSERT, ASSEMBLY	2	1138B	2	1383
GAUGE PLATE, ASSEMBLY	1	28	1	25
GAUGE PLATE, ASSEMBLY	1	33	1	1394
SPRING	12	56-0146		
SET SCREW	10	36-0261		
JAM NUT	10	36-0262		
SOC HD SCREW	12	36-0259		
SHIM (PIN)	10	A2904-002		

CATERPILLAR 8.500 PITCH 1U6031

MODEL		D7E,F,G			
LINK ASSEMBLY		571A SEALED	977 SEALED	973 SEALED	235 EXC SEALED
PIN SIZE		3P0955	(FORMER)	7T6037	3V4991,3/4 BOLT
BUSHING SIZE		1.877ØX9.88	1.877ØX9.88	1.877ØX9.88	7T9827,7/8 BOLT
		2.812ØX6.963	2.812ØX6.963	2.812ØX6.963	1.877ØX9.88
DESCRIPTION	QTY				2.812ØX6.963
SADDLE	1	D1096-001	D1096-001	D1096-001	D1096-001
TOOL MOUNT	4	573A	573A	573A	573A
SPACER, BUSHING	2	580	580	580	922
PIN TOOL DISASS'Y	2	1123	1123	1123	1123
BUSHING TOOL DISASS'Y	2	1107	1107	1107	1107
PIN HOLDER ASS'Y	2	579	579	579	579
PIN INSERT ASS'Y	2	577	577	577	577
BUSHING HOLDER ASS'Y	2	578	578	578	578
BUSHING INSERT ASS'Y	2	576A	576A	576A	576A
SPRING	4	56-0146	56-0146	56-0146	56-0146
GAUGE PLATE	1	28	28	28	221(3/8)&1453(7/8)
SET SCREW	4	36-0261	36-0261	36-0261	36-0261
JAM NUT	4	36-0262	36-0262	36-0262	36-0262
SOC HD SCREW	4	36-0259	36-0259	36-0259	36-0259
SHIM (PIN)	5	A2904-002	A2904-002	A2904-002	A2904-002

7/15/88

8.500 PITCH TOOL GROUP

CONTENTS

DESCRIPTION	QTY	REQUIRED I.D.	QTY	REQUIRED I.D.
SADDLE	1	D1096-001	1	D1096-002
TOOL MOUNT	4	573A		
SPACER, BUSHING	2	580	2	922
SPACER, BUSHING	2	1105		
PIN, DISASSEMBLY	2	589	2	1123
BUSHING, DISASSEMBLY	2	588	2	1107
PIN HOLDER, ASSEMBLY	2	579	2	1106A
PIN HOLDER, ASSEMBLY	2	593		
PIN INSERT, ASSEMBLY	2	1177	2	1178
PIN INSERT, ASSEMBLY	2	591A	2	577
PIN INSERT, ASSEMBLY	2	1179		
BUSH HOLDER, ASSEMBLY	2	592	2	578
BUSH INSERT, ASSEMBLY	2	590	2	576A
BUSH INSERT, ASSEMBLY	2	1384		
GAUGE PLATE	1	28	1	221
GAUGE PLATE	1	1453		
SHIM (PIN)	10	A2904-002		
SPRING	12	56-0146		
SET SCREW	10	36-0261		
JAM NUT	10	36-0262		
SOC HD SCREW	8	36-0259		

7/15/88

CATERPILLAR 8.500 PITCH 1U6031

MODEL LINK ASSEMBLY PIN SIZE BUSHING SIZE DESCRIPTION	QTY	D/E,F,G& 571A SEALED 3P0955 1.877ØX9.88 2.812ØX6.963	977 SEALED (FORMER) 1.877ØX9.88 2.812ØX6.963	973 SEALED 7T6037 1.877ØX9.88 2.812ØX6.963	235 EXC SEALED 3V4991,3/4 BOLT 7T9827,7/8 BOLT 1.877ØX9.88 2.812ØX6.963
SADDLE	1	D1096-001	D1096-001	D1096-001	D1096-001
TOOL MOUNT	4	573A	573A	573A	573A
SPACER, BUSHING	2	580	580	580	922
PIN TOOL DISASS'Y	2	1123	1123	1123	1123
BUSHING TOOL DISASS'Y	2	1107	1107	1107	1107
PIN HOLDER ASS'Y	2	579	579	579	579
PIN INSERT ASS'Y	2	577	577	577	577
BUSHING HOLDER ASS'Y	2	578	578	578	578
BUSHING INSERT ASS'Y	2	576A	576A	576A	576A
SPRING	4	56-0146	56-0146	56-0146	56-0146
GAUGE PLATE	1	28	28	28	221(3/8)&1453(7/8)
SET SCREW	4	36-0261	36-0261	36-0261	36-0261
JAM NUT	4	36-0262	36-0262	36-0262	36-0262
SOC HD SCREW	4	36-0259	36-0259	36-0259	36-0259
SHIM (PIN)	5	A2904-002	A2904-002	A2904-002	A2904-002

7/15/88

CATERPILLAR 8.500 PITCH 1U6031

MODEL		D,E,F,G& 571A SEALED	977 SEALED (FORMER)	973 SEALED	235 EXC SEALED 3V4991,3/4 BOLT 7T9827,7/8 BOLT
LINK ASSEMBLY		3P0955		7T6037	
PIN SIZE		1.877ØX9.88	1.877ØX9.88	1.877ØX9.88	1.877ØX9.88
BUSHING SIZE		2.812ØX6.963	2.812ØX6.963	2.812ØX6.963	2.812ØX6.963
DESCRIPTION	QTY				
SADDLE	1	D1096-001	D1096-001	D1096-001	D1096-001
TOOL MOUNT	4	573A	573A	573A	573A
SPACER, BUSHING	2	580	580	580	922
PIN TOOL DISASS'Y	2	1123	1123	1123	1123
BUSHING TOOL DISASS'Y	2	1107	1107	1107	1107
PIN HOLDER ASS'Y	2	579	579	579	579
PIN INSERT ASS'Y	2	577	577	577	577
BUSHING HOLDER ASS'Y	2	578	578	578	578
BUSHING INSERT ASS'Y	2	576A	576A	576A	576A
SPRING	4	56-0146	56-0146	56-0146	56-0146
GAUGE PLATE	1	28	28	28	221(3/8)&1453(7/8)
SET SCREW	4	36-0261	36-0261	36-0261	36-0261
JAM NUT	4	36-0262	36-0262	36-0262	36-0262
SOC HD SCREW	4	36-0259	36-0259	36-0259	36-0259
SHIM (PIN)	5	A2904-002	A2904-002	A2904-002	A2904-002

7/15/88

CATERPILLAR 8.500 PITCH 1U6031

MODEL		D7E,F,G& 571A	D7 PRO	D7H	D8L	D8N	973 HI RAIL	977 PRO
LINK ASSEMBLY		3P0629	9W8842	9G2423	7T2753	6V1136	9W9167	9W8812
PIN SIZE		1.850ØX9.882	1.878ØX9.882	1.878ØX9.882	1.878ØX9.882	1.878ØX9.882	1.878ØX9.882	1.878ØX9.882
BUSHING SIZE		2.812ØX6.409	2.812/2.937ØX6.409	2.937ØX6.405	2.937/3.215ØX6.406	2.937/3.214ØX6.405	2.812/2.937ØX6.409	2.812/2.937ØX6.409
DESCRIPTION	QTY							
SADDLE	1	D1096-001	D1096-001	D1096-001	D1096-002	D1096-002	D1096-001	D1096-002
TOOL MOUNT	4	573A	573A	573A	573A	573A	573A	573A
SPACER,MASTER PIN ASSY	2	N/A	N/A	N/A	N/A	1105	N/A	N/A
PIN TOOL DISASS'Y	2	589	589	589	589	589	589	589
BUSHING TOOL DISSASS'Y	2	1107	1107	588	588	588	1107	1107
PIN HOLDER ASS'Y	2	579	579	1106A	593	593	579	579
PIN INSERT ASS'Y	2	1178	1179	591A	1177	1177	1179	1179
BUSHING HOLDER ASS'Y	2	578	578	592	592	592	578	578
BUSHING INSERT ASS'Y	2	1384	1384	590	590	590	1384	1384
SPRING	4	56-0146	56-0146	56-0146	56-0146	56-0146	56-0146	56-0146
GAUGE PLATE	1	N/A	N/A	N/A	N/A	N/A	N/A	N/A
SET SCREW	4	36-0261	36-0261	36-0261	36-0261	36-0261	36-0261	36-0261
JAM NUT	4	36-0262	36-0262	36-0262	36-0262	36-0262	36-0262	36-0262
SOC HD SCREW	4	36-0259	36-0259	36-0259	36-0259	36-0259	36-0259	36-0259
SHIM (PIN)	5	A2904-002	A2904-002	A2904-002	A2904-002	A2904-002	A2904-002	A2904-002

7/15/88

8.500 PITCH TOOL GROUP

CONTENTS

DESCRIPTION	QTY	REQUIRED I.D.	QTY	REQUIRED I.D.
SADDLE	1	D1096-001	1	D1096-002
TOOL MOUNT	4	573A		
SPACER, BUSHING	2	580	2	922
SPACER, BUSHING	2	1105		
PIN, DISASSEMBLY	2	589	2	1123
BUSHING, DISASSEMBLY	2	588	2	1107
PIN HOLDER, ASSEMBLY	2	579	2	1106A
PIN HOLDER, ASSEMBLY	2	593		
PIN INSERT, ASSEMBLY	2	1177	2	1178
PIN INSERT, ASSEMBLY	2	591A	2	577
PIN INSERT, ASSEMBLY	2	1179		
BUSH HOLDER, ASSEMBLY	2	592	2	578
BUSH INSERT, ASSEMBLY	2	590	2	576A
BUSH INSERT, ASSEMBLY	2	1384		
GAUGE PLATE	1	28	1	221
GAUGE PLATE	1	1453		
SHIM (PIN)	10	A2904-002		
SPRING	12	56-0146		
SET SCREW	10	36-0261		
JAM NUT	10	36-0262		
SOC HD SCREW	8	36-0259		

7/15/88

9.000 PITCH TOOL GROUP

CONTENTS

DESCRIPTION	REQUIRED QTY	REQUIRED I.D.	REQUIRED QTY	REQUIRED I.D.
SADDLE	1	D1096-009	1	D1096-003
TOOL MOUNT	1	C1000-003	1	C1001-003
TOOL MOUNT	4	552A		
SPACER, BUSHING	2	716	2	1198
PIN, DISASSEMBLY	2	1117	2	546
PIN, DISASSEMBLY	2	932		
BUSHING, DISASSEMBLY	2	933		
PIN HOLDER, ASSEMBLY	2	935		
BUSHING, DISASSEMBLY	2	545		1118
PIN HOLDER, ASSEMBLY	2	848		
PIN INSERT, ASSEMBLY	2	850	2	875A
PIN INSERT, ASSEMBLY	2	1180A		
PIN INSERT, ASSEMBLY	1	937	1	938
BUSH HOLDER, ASSEMBLY	2	872A	2	1119A
BUSH HOLDER, ASSEMBLY	2	1153		
BUSH INSERT, ASSEMBLY	2	1151		
BUSH INSERT, ASSEMBLY	2	547A		
BUSH INSERT, ASSEMBLY	2	874A	2	1390
GAUGE PLATE	1	34		
SPRING	4	56-0150		
SPRING	12	56-0146		
SET SCREW	12	36-0261		
JAM NUT	12	36-0262		
SOC HD SCREW	8	36-0259		
SHIM (PIN)	10	A2904-003		

7/15/88

9.000 PITCH TOOL GROUP

CONTENTS

DESCRIPTION	REQUIRED QTY	REQUIRED I.D.	REQUIRED QTY	REQUIRED I.D.
SADDLE	1	D1096-009	1	D1096-003
TOOL MOUNT	1	C1000-003	1	C1001-003
TOOL MOUNT	4	552A		
SPACER, BUSHING	2	716	2	1198
PIN, DISASSEMBLY	2	1117	2	546
PIN, DISASSEMBLY	2	932		
BUSHING, DISASSEMBLY	2	933		
PIN HOLDER, ASSEMBLY	2	935		
BUSHING, DISASSEMBLY	2	545		1118
PIN HOLDER, ASSEMBLY	2	848		
PIN INSERT, ASSEMBLY	2	850	2	875A
PIN INSERT, ASSEMBLY	2	1180A		
PIN INSERT, ASSEMBLY	1	937	1	938
BUSH HOLDER, ASSEMBLY	2	872A	2	1119A
BUSH HOLDER, ASSEMBLY	2	1153		
BUSH INSERT, ASSEMBLY	2	1151		
BUSH INSERT, ASSEMBLY	2	547A		
BUSH INSERT, ASSEMBLY	2	874A	2	1390
GAUGE PLATE	1	34		
SPRING	4	56-0150		
SPRING	12	56-0146		
SET SCREW	12	36-0261		
JAM NUT	12	36-0262		
SOC HD SCREW	8	36-0259		
SHIM (PIN)	10	A2904-003		

CATERPILLAR 9.448 PITCH 3U6029

MODEL:		D9N
LINK ASSEMBLY		6Y1130
PIN SIZE		2.003ØX10.984
BUSHING SIZE		3.163ØX7.257
DESCRIPTION	QTY	3.346
SADDLE	1	D1096-007
TOOL MOUNT	4	1126A
SPACER, BUSHING	2	N/A
MASTER PIN SPACER	2	A2783-003
PIN TOOL DISASS'Y	2	1110
BUSHING TOOL DISASS'Y	2	1148
PIN HOLDER ASS'Y	2	1111A
PIN INSERT ASS'Y	2	1059
BUSHING HOLDER ASS'Y	2	1149
BUSHING INSERT ASS'Y	2	1057A
SPRING	4	56-0146
GAUGE PLATE	1	N/A
SET SCREW	4	36-0261
JAM NUT	4	36-0262
SOC HD SCREW	4	36-0259
SHIM (PIN)	5	A2904-003

7/15/88

10.250 PITCH TOOL GROUP

CONTENTS

DESCRIPTION	REQUIRED QTY	REQUIRED I.D.	REQUIRED QTY	REQUIRED I.D.
SADDLE	1	D1092-004	1	D1092-003
TOOL MOUNT	4	557A		
TOOL MOUNT	1	C1000-002	1	C1001-002
SPACER - MASTER PIN	2	1157	2	1158
SPACER, BUSHING	2	883		
PIN, DISASSEMBLY	2	858	2	864
PIN, DISASSEMBLY	2	906	2	910
BUSHING, DISASSEMBLY	2	859	2	907
BUSHING, DISASSEMBLY	2	1061		
PIN HOLDER, ASSEMBLY	2	909	2	866A
PIN INSERT, ASSEMBLY	2	880	2	1114
PIN INSERT, ASSEMBLY	1	868	1	869
PIN INSERT, ASSEMBLY	2	1181		
BUSH HOLDER, ASSEMBLY	2	908	2	865A
BUSH HOLDER, ASSEMBLY	2	1154	2	1174A
BUSH INSERT, ASSEMBLY	2	879	2	882
BUSH INSERT, ASSEMBLY	2	1064		
BUSH INSERT, ASSEMBLY	2	867		
PIN HOLDER, ASSEMBLY	2	1155		
GAUGE PLATE	1	35	1	924
SPRING	12	56-0146	16	56-0150
SET SCREW	12	36-0261		
JAM NUT	12	36-0262		
SOC HD SCREW	8	36-0259		
SHIM (PIN)	10	A2904-003		

7/15/88

CATERPILLAR 12.500 PITCH 116027

MODEL		D11N PPR
LINK ASSEMBLY		6Y1128
PIN SIZE		2.6260X13.812
BUSHING SIZE		4.195 4.330 0X9.343
DESCRIPTION	QTY	
SADDLE	1	D1092-005
TOOL MOUNT R.H.	1	C1000-005
TOOL MOUNT L.H.	1	C1001-005
PIN TOOL DISASSEMBLY	2	925
BUSHING TOOL DISASS'Y	2	926
PIN HOLDER ASS'Y	2	928
PIN INSERT NOMINAL	1	930
PIN INSERT OTHER SIDE	1	931
BUSHING HOLDER ASS'Y	2	1152
BUSHING INSERT ASS'Y	2	1150
SPRING	4	56-0150
SET SCREW	4	36-0261
JAM NUT	4	36-0262
SPACER, ANVIL	2	A2871